The Journal of the DuPage County Bar Association

D • C • B • A

BRIEF

Volume 20 Issue 2 Oct / Nov 2007

The DCBA Committees

The DCBA BRIEF celebrates Volume 20 with a series of interviews with the Chairs of the various DCBA Committees.

Presorted Standard
U.S. Postage
PAID
West Chicago, IL
Permit #250

1 of 8: The Law Practice Management, Child Advocacy and New & Young Lawyers Committees.

From the Lead Editor

by Eric Waltmire

Insurance and Storm Damage. On Thursday, August 23, parts of DuPage County were hit with a massive storm. The National Weather Service confirmed a tornado touched-down between Winfield and Wheaton. The tornado had winds up to 110 miles per hour and traveled two miles from Prince Crossing Road to Gary Avenue. On Friday, the Governor declared DuPage County a state disaster area. High winds in the surrounding areas knocked out power and caused injury to people and property. The Daily Herald reported that ten cars were crushed in the parking lot of Ball Horticultural, in West Chicago. The paper also reported the roof of Uptime Parts collapsed and injured forty people. Further, in Villa Park, 1,500 trees were down or damaged. The power outage stretched into Friday effecting about 108,000 customers. One of those customers was the DuPage County Courthouse, which was forced to close on Friday because of the outage. Considering these events, in this issue **Jennifer Moore** provides a timely article covering "Insurance and Storm Damage – Who pays?"

Litigation Strategy Illustrated. When you meet a fork in the road, the classic advice to "take it" is not very helpful. Many forks arise in litigation such as whether to file suit, whether to file a motion to dismiss, or whether to settle. **David Madden** might have the solution to free you from your decision-making roadblock. David's article shows how to use decision trees to determine the best course of action in litigation. Decision trees mesh case data like costs and probable judgment amounts in a graphical illustration to inform your decision. David's hypothetical client comes complaining that the dry cleaners damaged his pants, of course that type of suit would never arise in real life—but wait—didn't I see an article entitled "Judge Tries Suing Pants Off Dry Cleaners" in the New York Times on June 13, 2007? Well, maybe the scenario is not so hypothetical.

Divorce Agreements Meet Bankruptcy Court. If you have ever recommended that your client waive maintenance in exchange for "hard assets" in a marital settlement agreement, **Kent Gaertner** explains why the bankruptcy trustees may be knocking on your client's door.

Internet Communications and the Eavesdropping Statute. Are you committing a felony violation of the Illinois eavesdropping statute by saving a copy of an Internet chat conversation you had with a colleague? Do police violate the statute when doing the same during undercover operations designed to catch persons making indecent solicitations of underage persons online? In my article, I analyze the eavesdropping statute in the context of Internet communications to determine when the statute applies to such communications. ■

D • C • B • A
BRIEF

The DCBA BRIEF is published by the DuPage County Bar Association
http://www.dcbabrief.org

OFFICE
126 S. County Farm Road
Wheaton, Illinois 60187
PHONE (630) 653-7779
FAX (630) 653-7870
E-mail: info@dcbabrief.org

D • C • B • A
BRIEF

Volume 20, Number 2 November 2007

Table of Contents

LEAD ARTICLES

REGULAR FEATURES

ON THE COVER

This month's cover is the first in a series of eight that we're running, in celebration of Volume 20 of the Brief, to honor the DCBA Committees and the vital role they play in this organization. Pictured are Mazyar Hedayat (Law Practice Committee), Dion Davi (New Lawyers Committee), and Sean McCumber (Child Advocacy Committee). We're also running interviews with each Committee Chair over the course of the next eight editions, staring with these three gentlemen. Their profiles begin on page 48.

Cover photo by REP3.com © 2007 Robert Erving Potter III www.REP3.com

ADVERTISERS

The DCBA BRIEF is published by the DuPage County Bar Association
http://www.dcba.org

OFFICE
126 S. County Farm Road
Wheaton, Illinois 60187
PHONE (630) 653-7779
FAX (630) 653-7870
E-mail: bar@dcba.org

PRESIDENT'S MESSAGE

Judicial Independence: The Cornerstone of Our Democrary

by Fred A. Spitzzeri

The DuPage County Bar Association, founded in 1879, has always enjoyed an outstanding relationship with the judiciary. In fact, three of the four original incorporators of the DCBA subsequently went on to serve on the bench including Elbert Gary, the founder of U.S. Steel, for whom the City of Gary, Indiana and the street Gary Avenue are named.[1]

Being a judge is not an easy job. The judiciary is under attack as never before. At a recent ABA convention, four judges spoke about how their lives had been adversely affected based on unpopular rulings they had made. One speaker was George Greer, the Florida judge who issued the decision to end the life support for Terri Schiavo. He told of the many death threats he had received since that ruling, and how, for his own safety, he registered for the conference at the hotel under a fictitious name.

Then there was New Jersey Supreme Court Justice Roberto Rivera-Soto, who last year participated in a ruling which held that gay and lesbian couples deserve the same rights as married couples. Other judges who presented included a former Texas judge who had issued an order holding some anti-abortion activists in contempt of court for harassing certain Houston area doctors who performed abortions, and an ex-California Supreme Court Justice who was defeated in his reelection bid by voters for reversing the death sentence in a high profile criminal case.

The independence of the judiciary is the cornerstone of our democracy. For those who would decry so called activist judges, I remind them of the words of Former Chief Justice Warren Berger who, in *The Power of Judicial Review* wrote: "Judges rule on the basis of law, not public opinion, and they should be totally indifferent to pressures of the times."

The importance of judicial autonomy was also expressed by Thomas Jefferson in 1820 when he de-

Continued on page 6

***Fred Spitzzeri** has had an active trial practice for over 20 years. A former insurance defense attorney with a large firm, he currently is a sole practitioner concentrating in civil litigation, especially in the area of personal injury practice. He is a Certified Arbitrator and Mediator, and an adjunct faculty member at North Central College. Over the years he has served as both a Prosecutor and a Hearing Officer for the Illinois Secretary of State, and currently serves as a Hearing Officer for the Illinois State Board of Education on an independent contractual basis resolving disputes involving special needs students. Fred is a cum laude graduate of Loyola University School of Law, where he served as Captain of both the Trial Practice and Moot Court teams, won the 7th Circuit's Client Counseling Competition, and received the Am Jur Award for Professional Responsibility. He is admitted to practice before the Federal Trial Bar for the Northern District of Illinois, and before the United States Supreme Court.*

UPCOMING EVENTS

October 2007

2 **Executive Committee Meeting**, Noon, Library

8 **COURTS/DCBA CLOSED**

10 **Publication Board Mtg.**, Noon, Boardroom

11 **Academy of Bar Leaders**, 3:00 p.m., North Central College, Naperville

13 **Civil Law Seminar,** 8:00 a.m., Cress Creek Cuntry Club, Naperville

16 **Alternative Dispute Resolution**, Noon, ARC
Board of Directors Mtg., 4:30 p.m., Boardroom

17 **Legal Aid Committee/Foundation Mtg.**, 8:00 a.m., Library
Local Government Committee, Noon, ARC

18 **Civil Law Committee**, Noon, ARC Tentative

20 **Children's Advocacy GAL Seminar**, 9:30-Noon, Classroom

23 **Family Law Committee**, Noon, ARC

25 **Lawyers Lend a Hand,** 5:00 p.m., Midwest Shelter for Homeless Veterans

30 **DuPage Commission on Professionalism**, 12-1:30 p.m., ARC

November 2007

6 **Executive Committee Mtg.**, Noon, Library

8 **New Admittees Swearing in**, 9:00 a.m., Hemmens Auditorium
Publication Board Mtg., Noon, Boardroom

12 **COURTS CLOSED/VETERANS DAY**

13 **DuPage Commission on Professionalism**, 12-1:30 p.m., ARC

14 **Veterans' Day Luncheon**, Noon, ARC

11 **Academy of Bar Leaders**, 3-6:30 p.m. North Central College, Naperville

15 **Real Estate Law Com. Mtg. Presentation**, Noon, NCC
Civil Law Com. Mtg. Presentation, Noon, ARC

20 **Alternative Dispute Resolution**, Noon, ARC
Board of Directors Mtg., 4:30 p.m., Boardroom
Lawyers Lend a Hand Coat Drive, 5:00 p.m., Classroom

21 **Legal Aid Committee/Foundation Mtg.**, 8:00 a.m., Boardroom
Local Government Com., Noon, ARC

22/23 **BAR CENTER & COURTS CLOSED FOR THANKSGIVING**

27 **Family Law Com. Mtg.,** Noon, ARC

29 **Tax Law Committee Mtg.,** Noon, Boardroom

30 **BASIC SKILLS TRAINING**

clared that: "A judiciary independent of a king or an executive, alone, is a good thing..." In the famous Supreme Court case of *Marbury v. Madison,* the seminal decision which articulated the principle of judicial review, Supreme Court Justice John Marshall wrote that: "It is emphatically the province and duty of the judicial department to say what the law is."[2]

To critics who complain about certain judges being soft on crime, I would remind them of the 18th Century legal philosopher Black-stone who stated: "For the law holds, that it is better that 10 guilty persons escape than one innocent suffer."[3] This is a principle that was also articulated by Supreme Court Justice Oliver Wendell Holmes in *Olmstead v. United States*, where he opined: "For my part, I think it is a less evil that some criminals should escape, than that the government should play an ignoble part."[4]

It is the duty of the bar association, in general, and of every lawyer in particular, to preserve, protect and defend the Constitution. Under our Constitution, we have three separate and co-equal branches of government: the executive, the legislative, and the judicial. It is only through an independent judiciary, free of external or political influences, and committed to the Constitution, that we can begin to fulfill the promise made by Abraham Lincoln almost 150 years ago that "...[G]overnment of the people, by the people, and for the people, shall not perish from the earth."■

[1] I recently had the honor of speaking at the installation ceremony of 2 of our newest Associate Judges: Mary Beth O 'Connor and Tim McJoynt. What follows is a summary of those comments, reflecting on the importance of having an independent judiciary.

[2] Marbury v. Madison, 5 U.S. (1 Cranch) 137, 177, 2 L.Ed. 60 (1803).

[3] William Blackstone, Commentaries on the Laws of England *352 (1769).

[4] Olmstead v. U.S., 277 U.S. 438, 470, 48 S.Ct. 564, 575, 72 L.Ed. 944 (1928).

LETTER'S TO THE EDITOR

Editor's note: After our feature on Agnes Kirby's retirement from the courthouse in June, we received a handful of letters that came in too late for publication. One last time, therefore, in lieu of letters to the editor, we're pleased to present the last of the letters we received to Dear Agnes:

Dear Agnes:
I am pleased to see your nice picture gracing the cover of the most recent Brief. However, the letters describing how special you have been to all the judges, lawyers, and court personnel come as quite a disappointment. Here, all along, I thought you had singled me out for extra courteous attention. You will be sorely missed, but your retirement is much deserved.
Best Wishes,
Roy I. Peregrine

Dearest Agnes:
On your retirement, I can't fathom how the DCBA members, as well as the environs of the Judicial edifice in DuPage County, will carry on without the "Patron Saint of the Court House...Agnes of God." Knowing you, Agnes, you will continue bestowing your thoughts and prayers on us all, and *we* will continue to be thankful for your incredible friendship, thoughtfulness, and devotion to bringing out the very best in us all.
Love and hugs...PKQ

Dear Agnes:
Thanks for always being in a good mood and putting up with our endless questions. My client, Mrs. Marie V. Maurer, will always remember you and Judge Teschner for listening to her and allowing her to state her case. This resulted in her being able to save her home. A big thank you.
Joe Vosicky

LAWYERS LENDING A HAND
Come Do Yourself Some Good…By Helping Others

The Lawyers Lend a Hand project for **October** is scheduled for Thursday, October 25th at 5:00 PM. We will visit the Midwest Shelter for Homeless Veterans. We have been asked to assist with a number of tasks at the non-for-profit transitional living facility in Wheaton. This is a new facility that provides assistance to U.S. veterans of any era for the opportunity to return to useful and productive lives by providing them with the skills for independent living. The home is located at 119 N. West Street, Wheaton.

For **November**, we will again hold our annual coat drive. LLH Chair Paul Marchese hopes to exceed last year's collection of 1,000 coats. You may drop off the coats at the Bar Center effective November 1 through 5:00 PM on November 20. We plan to distribute the coats to various agencies in the county. The committee is asked to meet at the Bar Center on Tuesday, November 20th at 5:00 PM to assist with sorting and distribution.

Ticor Title is committed to providing value-added services and programs for its attorney customers. Now attorneys can team up directly with one of the nation's leading underwriters as a member of the Ticor Title Attorney Agent Program.

By joining the Ticor Title Attorney Agent Program, you will enjoy a wide array of benefits…

- Utilize the resources of a full-service title underwriter.
- Build relationships with Ticor's knowledgeable staff that is here to support you during all phases of the real estate transaction.
- Receive expert training and continued underwriting support from one of the nation's leading full-service title companies.
- Utilize TI-PRO, Ticor's proprietary document preparation program designed to assist legal professionals throughout the closing process.
- Take advantage of TI-AGENT, an online ordering system specifically designed for Ticor Attorney Agents, allowing users to place and view their orders, search packages and commitments online.
- Schedule to close at any one of our convenient closing locations throughout Illinois.
- Avoid long delays, accounting or billing hassles or post-closing issues.

For more information on the Ticor Title Attorney Agent Program, call us at **1-800-543-7641,** visit us at **www.illinois.ticortitle.com,** or contact your local Ticor Title account manager at one of our convenient Chicago-area offices.

TICOR TITLE
INSURANCE COMPANY

Ticor.
Get with the Program.

Insurance and Storm Damage – Who Pays?

by Jennifer L. Moore

On Thursday, August 23, 2007, severe thunderstorms overwhelmed northern Illinois and other parts of the Midwest, leaving in their wake floods, debris, and enduring power outages. DuPage County was one of several counties that suffered widespread damage and that Governor Rod Blagojevich designated a disaster area. Hitting close to home, even the 18th Judicial Circuit Court in Wheaton, Illinois was forced to close its doors on August 24, 2007 due to a power outage.

The recent storms have likely left many homeowners wondering whether their homeowner's policies will cover any amount of the damage incurred as a result of flooding. As a general rule, unfortunately for the homeowner, the answer is no. The following is a flood exclusion provision from a well-known insurer's homeowner's policy:

SECTION I – LOSSES NOT INSURED

* * *

2. We do not insure under any coverage for any loss which would not have occurred in the absence of one or more of the following excluded events. We do not insure for such loss regardless of: (a) the cause of the excluded event; or (b) other causes of the loss; or (c) whether other causes acted concurrently or in any sequence with the excluded event to produce the loss; or (d) whether the event occurs suddenly or gradually, involves isolated or widespread damage, arises from natural or external forces, or occurs as a result of any combination of these:

* * *

a. **Water damage**, meaning:
(1) flood, surface water, waves, tidal water, tsunami, seiche, overflow of a body of water, or spray from any of these, all whether driven by wind or not;
(2) water or sewage from outside the **residence premises** plumbing system that enters through sewers or drains, or water which enters into and overflows from within a sump pump, sump pump well or any other system designed to remove subsurface water which is drained from the foundation area; or
(3) water below the surface of the ground, including water which exerts pressure on, or seeps or leaks through a building, sidewalk, driveway, foundation, swimming pool or other structure.

"Hitting close to home, even the 18th Judicial Circuit Court in Wheaton, Illinois was forced to close its doors on August 24, 2007 due to a power outage."

Because the term "flood" is often not defined in a policy, homeowners assert that the term is ambiguous, as it fails to specify whether the term applies to naturally occurring floods, man-made floods, or both. However, the courts consistently look to the term's plain, ordinary, and generally prevailing meaning and find no ambiguity. [1]

In the aftermath of Hurricane Katrina, homeowners once again raised the issue of whether the flood exclusion should be inapplicable to water damage caused by wind-induced storm surge, without success.[2] In homeowner's policies, wind-induced damage is covered, but damage due to flooding is excluded. Thus, if the vinyl siding on a house is damaged from extreme winds, the cost of repairing the siding should generally be covered under the homeowner's policy. Homeowners have contended that wind-induced storm surge is not a "flood" within the meaning of the flood exclusion, as the water did not escape from the sewers or a nearby watercourse, but fell from the sky during a storm. In other words, the massive amounts of flood water (not covered) were a direct result of the storm's winds

Jennifer L. Moore *, B.A. 2001, magna cum laude, University of Kentucky and J.D. 2006 Tulane University Law School, admitted to the Illinois Bar in 2006 and the U.S. District Court, Northern District of Illinois in 2007. Jennifer is an associate with the firm who practices in the area of insurance coverage. Jennifer is a member of the Illinois State Bar Association, the Women's Bar Association of Illinois, and the DuPage County Bar Association.*

(covered). However, courts have consistently held that water damage is excluded, regardless of whether the water was driven by wind.[3]

Illinois courts also find the flood exclusion to be in-applicable to water damage caused by storms. In *Whitt v. State Farm & Casualty Co., supra,* State Farm provided homeowner's insurance to the plaintiffs, the Whitts, on July 17, 1996, when a massive rainstorm caused water to enter the Whitts' home in Aurora, Illinois through the basement windows, a hole in the furnace room wall, under the doors to the house and garage, and through the roof and skylight.[4] The Whitts evacuated their home on boats. State Farm paid the Whitts $1,432.86 for water damage resulting from rain entering the home through the roof and skylight, but denied coverage for the damage caused by water entering the home via other means.[5]

The Whitts filed a complaint against State Farm and their agent, and State Farm filed a counterclaim seeking a declaratory judgment that the Whitts' homeowner's policy did not provide coverage for the water damage resulting from flooding.[6] Cross-motions for summary judgment were filed. The Second District Appellate Court of Illinois found that, although Mr. Whitt testified he received a State Farm brochure that depicted drawings of water damage and implicitly promised coverage for same, the brochure was not part of the insurance contract and, therefore, did not dictate coverage.[7] Furthermore, the court found that the trial court erred in finding the term "flood" to be ambiguous and granting the Whitts' motion for summary judgment.[8] The policy clearly and unambiguously excluded coverage for the water damage claimed by the Whitts.[9]

Regarding storm debris,

DiTommaso & Lubin

"There is no experience better for the heart than reaching down and lifting people up."

- John Andrew Holmer

We are so very thankful for your generosity, thoughtfulness, and hard work. Thank you for the Cy Pres award of $216,139.81. Your very generous award gives so many hope and will truly touch many lives. It will allow DuPage Bar Legal Aid Service to continue to serve those in need in DuPage County, and will give many a fresh start.

Your leadership and commitment have and will continue to strengthen DuPage County's legal community.

Thanks for lifting so many people up! We are very grateful.

With Sincere Gratitude,
The DuPage Legal Assistance Foundation

homeowner's policies will typically pay up to appro-ximately $500.00 to cover reasonable expenses incurred in the removal of tree debris if the tree damaged a structure on the property by coming in physical contact with the structure. If that tree was once rooted in the neighbor's yard before falling into the homeowner's yard, the neigh-bor's homeowner's policy more than likely will cover the cost of removing the tree and repair to any damage to structures. This is commonly provided for in home-owner's policies under the "Liability Cover-ages" section, and is also often referred to as "good neighbor" liability coverage.

Additionally, home-owner's policies generally do not cover articles that are specifically insured in another policy. For example, if a storm causes damage to a vehicle while it is sitting in the driveway of a home, the homeowner's policy will not cover the damage because the vehicle is insured under a separate vehicle policy.

Along with power outages comes the problem of food spoliation and mold. Homeowner's policies will typically cover the contents of deep freeze or refrigerated units on the residence premises for loss due to power failure or mechanical failure. As always, it is the homeowner's duty to mitigate the damages and give his or her best efforts to move and/or recover the items before they are damaged. Mold, fungus, and dry or wet rot, however, are excluded from most homeowner's policies, whether they are the result of a power outage's lack of light and air-conditioning or the result of flooding.

If there is potential coverage for wind damage, spoliation, or water damage resulting from a storm, a homeowner is obligated to give immediate notice of the claim to the insurer or the insurer's agent, protect the property from further damage or loss, and inventory the damaged items. Furthermore, the homeowner has a duty to cooperate with the insurer as the insurer evaluates the claim to determine whether there is coverage. This may include presenting the damaged property for inspection and providing records of ownership or value. If a homeowner breaches these duties, the insurer may be relieved from paying on the claim.

Fortunately, for homeowners who are consistently threatened by the possibility of floods, there are precautions that may be taken. Most homeowner's policy insurers offer a back-up of sewer or drain endorsement, which, for an additional premium, covers direct physical loss caused by water or sewage from outside of the home plumb-ing system that enters through sewers or drains, or water which enters into and overflows from within a sump pump. The endorse-ment may cover non-personal property, or that which is part of the residence structure, and/or personal property, individual belong-ings detached from the structure. Alternatively, many insurers write flood insurance policies that are written through the National Flood Insurance Program (NFIP) and administered by the Federal Emergency Management Agency (FEMA).

Although it takes tremendously damaging storms and flooding to bring these issues to the forefront, it is imperative that homeowners have a copy of their policies, have a basic understanding of what they do and do not cover, obtain additional coverage if appropriate, and know when to make a claim, and for what the claim should be made.■

[1] *Wallis v. Country Mut. Ins. Co.,* 309 Ill.App.3d 566, 723 N.E.2d 376, 383 (2nd Dist. 2000) (finding that the plain meaning of flood is "water that escapes from a watercourse in large volumes and flows over adjoining property in no regular channel ending up in an area where it would not normally be ex-pected"); *Whitt v. State Farm and Casualty Co.,* 315 Ill.App.3d 658, 734 N.E.2d 911, 914 (2nd Dist. 2000) (finding "flood" to be an "inundation of water over land not usually covered by it").

[2] *In re Katrina Canal Breaches Litigation*, 2007 WL 2200004 (5th Cir. Aug. 2, 2007) (flood exclusions in homeowner's, renter's, and commercial property policies unambiguously precluded coverage for losses caused by flooding due to breached levees.)

[3] *Id.; see also, Buente v. Allstate Prop. & Cas. Ins. Co.*, 2006 WL 980784 (S.D. Miss. April 12, 2006.)

[4] *Whitt,* 315 Ill.App.3d at 659.

[5] *Id.*

[6] *Id.* at 660.

[7] *Id.* at 660-61.

[8] *Id.* at 622.

[9] *Id.* at 624.

What's **UP** in a **DOWN** Market?

The **HCA Group Legal Program** is **way up** with over a quarter million qualified consumer participants. The regions fastest growing Group Legal Program is designed to **deliver new clients from new business** sources at no cost to participating law firms.

Counseled Video Closings™ (CVC) are **way up** as this cutting edge video conferencing technology **eliminates attorney travel and waiting time** at closings while simultaneously extending the geographic reach of your law practice.

Improved Law Firm Productivity is **UP** resulting in **greater law firm profitability** via the nations only 'lawyer centric' Web Based Transaction Management Platform.

Complimentary MCLE Programs of *actual* ***relevance*** **to your real property** practice are **UP** *[including exposure mitigation techniques from prior participation in RESPA challenged title programs]*

Market conditions are like the weather…everybody complains,
but no one *does anything* about it…until now that is.

To learn how to bring your real property practice **UP,**
contact Suzanne Cronin at 773-238-7100.

Professional National Title Network, Inc.

Chicago – Crystal Lake – Joliet – Libertyville – Lincolnwood – Lombard – Oak Lawn – Olympia Fields – Palatine – Tinley Park

PNTN is an agent for the Florida Fund, the nation's largest bar related® title group operating exclusively through law firm members since 1948.

Trial Lawyers dedicated to serving the interests of their clients in complex civil litigation in DuPage, Cook, Kane and other surrounding Counties for over 25 years.

WALSH, KNIPPEN, KNIGHT AND POLLOCK, CHARTERED
601 WEST LIBERTY DRIVE, WHEATON, ILLINOIS 60187
(630) 462-1980 □ FAX (630) 462-1984
www.wkkplaw.com □ lawyers@wkkplaw.com

I'd like to invite you to join me at the first ever

DuPage County Bar Association
Veteran's Day Luncheon
November 14, 2007
12:00 noon
Attorney Resource Center, 3rd Floor, DuPage Judicial Center

Fred Spitzzeri, DCBA President

This is a salute to all of our members who are veterans, the sons or daughters of veterans, or are moms and dads of veterans themselves, who safeguard our freedom and liberty everyday. As the saying goes, "All gave some, and some gave all."

Keynote Speaker: Admiral Henry F. White, Jr. [Ret.]
American Bar Association Executive Director

Registration Fees: Complimentary to DCBA Members who are Veterans
$10 for all others

To Sue or Not To Sue: A Hypothetical Case Study in The Use of Decision Trees in Developing Litigation Strategy

by David M. Madden

You're sitting at your favorite bistro idly chatting with your friend (and repeat client) Dino over a lunch of *House Salad* and *Double-Fried Onion Rings with Cheese and Chili* when he says, "By the way, [your nickname used by your most intimate friends], I'd like you to sue my dry cleaner for me." You think: "You're kidding, right?" but you say: "Pray tell, how has this heinous villain damaged my dear and closest friend?"

Dino says: "You remember those platinum-and-diamond-covered leather pants I bought my wife for our 20th anniversary? I took them to DinDoit Dry Cleaners, and they totally wrecked the pants. The platinum has lost its sheen, the diamonds have no sparkle, and the leather feels, well, not leathery when you wear them." You refrain from asking Dino how he knows what his wife's pants feel like when they are worn. Dino continues: "I paid $300,000 for those pants, and now they're not worth $300."

David M. Madden *is an associate attorney, focusing in commercial transactions and commercial litigation, Momkus McCluskey Monroe Marsh & Spyratos, LLC, in Downers Grove, Illinois. He graduated from Michigan State University in 1998 with a B.A. in Political Science and Public Policy Studies and from DePaul University, in 2003 with a J.D. and Certificate in General Intellectual Property Law.*

You respond, delicately: "I'm certain that you, valued friend and client, would not have approached me with this case were it not worthy of prosecution before our highest state, federal, and international tribunals. Before we embark on our moral crusade against the defilement of opulent party-wear, however, let's decide whether this lawsuit is worth the risk for you."

"What do you mean, 'worth the risk'?" Dino demands.

"Let me explain," you respond.

About Decision Trees

One way to determine the best way to tackle Dino's dilemma is to create a decision tree. A decision tree is a decision-making model that considers your options and the possible outcomes of anticipated events, and attempts to predict your best course of action. Skip ahead to *Figure 1* for a moment for an example of a simple decision tree.

Decision trees can be a useful tool in helping to map out your best course of action, especially when you are faced with a wide array of decisions and possibilities.

Every decision tree has a *starting point*, or *status quo*, which represents your situation right now, before you have made any decisions and

before any events have occurred which may alter your *status quo*. "*Branches*" extend from the starting point to "*nodes*." Each *node* represents either a decision which you can make (a "*decision node*"); an event with an uncertain outcome (an "*uncertain event node*"); or an ultimate result of the decisions you have made and the events which have occurred (a "*result node*").

Every *decision node* and *uncertain outcome node* has *branches* extending from it. *Branches* extending from *decision nodes* represent decisions you can make. *Branches* extending from *uncertain outcome nodes* represent the possible outcomes of events.

All *branches* extending from *uncertain outcome nodes* have percentages assigned to them. Each percentage represents the probability of that outcome occurring, in relation to the other possible outcomes extending from the node. The percentages of all *branches* extending from an *uncertain outcome node* must add up to 100%, because the *branches* extending from that node must account for all possible outcomes.

Branches extending from *decision nodes* do not have probabilities assigned to them because there is no chance involved in a *decision node*—you control the outcome of your decisions.

All *result nodes* have *values* assigned to them. *Values* are determined by taking the anticipated benefit of the result, subtracting the anticipated cost of reaching that result, and then multiplying that amount by the probability that the result will occur.

You assign percentages to *uncertain outcome nodes* and *values* to *result nodes* as estimates based upon your experience and understanding of the situation.

At the end of the process, your best course of action will be to make the decisions which lead to the set of *result nodes* with the highest collective value.

Figure 1

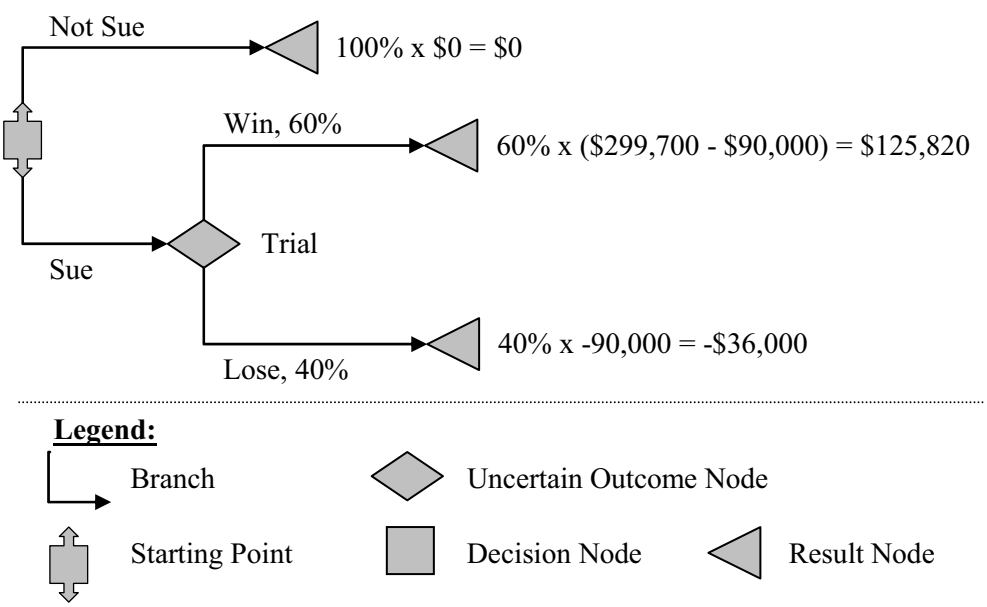

Now that we know what the parts of a decision tree are, let us put this theory into practice by growing a decision tree for Dino.

Dino's First Tree

The *status quo*, or starting point, for Dino is that DinDoit Dry Cleaners has wrecked his wife's pants, and Dino wants to do something about it. Initially, Dino has two options: (1) do not sue; or (2) sue. If Dino does not sue, he has a 100% chance of recovering $0. Then again, he will not have spent any money on attorneys' fees or litigation costs.

On the other hand, you have determined that Dino would have a 60% chance of winning at trial and recovering the lost value of his wife's pants of $299,700. You further estimate that it would cost Dino $90,000 in attorneys' fees and other litigation expenses to try the case. So, if Dino sues, he will have a 40% chance of "losing" $90,000 in litigation expenses and getting nothing in return, but also a 60% chance of netting $209,700 if he wins.

A simple decision tree based upon these possibilities might look like *Figure 1*.

Let us break the decision tree down. First, why does the *Not Sue* "branch" state that the result will be a break-even at $0, rather than a loss of $299,700. If Dino does not sue, does he not lose all but $300 of value in the pants?

Yes, but Dino's loss took place in the *past*. What is done is done. This decision tree is designed to help you make decisions *going forward*. Thus, the starting point on the decision tree assumes that the loss has already occurred, and attempts to analyze what the results of your decisions might be from the present, going forward.

Second, if we are not factoring the $299,700 loss into our decision tree, why are we factoring in the $90,000 in litigation costs? We include the $90,000 in litigation costs in our decision tree because they have not occurred yet. Whether these costs will occur will be the result of Dino's decision to *Sue* or *Not Sue*. We cannot do anything about the $299,700 loss, but Dino can make a decision about whether or not to incur litigation

costs. Accordingly, we should factor these costs into our decision tree analysis.

Third, why are the possible results of the *Trial* multiplied by the probability of that result occurring? For example, why is the 40% probability of *Lose* at *Trial* multiplied by the cost of the loss, -$90,000, for a "value" of -$36,000?

We multiply the anticipated result by the probability of that result occurring to give us an objective way to compare the value of possible outcomes. Without this step, a decision tree would not be very useful, because it would not provide us with any way to compare one possible result to another. Taking this step, however, allows us to "normalize" all results, and compare the "value" of a *Win* ($125,820) to the "value" (or "cost") of a *Loss* (-$36,000). In this case, it would seem that the normalized upside of a win is greater than the normalized downside of a loss.

Fourth, as a rule, all of the probabilities stemming from an "uncertain outcome node" must add up to 100%. In this decision tree, we refer to *Trial* as an "uncertain outcome node" because Dino does not control the outcome of this event—in other words, we cannot predict the outcome with absolute certainty. Based upon events which are not entirely within Dino's control, he may either *Win* (60%) or *Lose* (40%) at *Trial*. For a moment, imagine that these probabilities do not add up to 100%, and that, instead, there is a 50% chance that Dino will *Win* and a 40% chance that he will *Lose*. That leaves a 10% chance of something else occurring. You have three options at this point. You can: (a) grow a new branch to account for the remaining 10% (perhaps settlement at a certain amount); (b) revise your existing probabilities to make up the difference; or (c) you can just leave the 10% un-accounted-for. I highly recommend choosing option (a) or (b), as option (c) will wreak havoc with your decision tree. Just trust me.

Finally, what decision should Dino make: *Sue* or *Not Sue*? The answer can be found by comparing the total value of each branch. The *Not Sue* branch has a total value of $0. The *Sue* branch has a total value of $89,820 ($125,820 for a *Win* minus $36,000 for a *Loss*).

Thus, the *Sue* branch has a greater value than the *Not Sue* branch, and the decision tree advises us that *Sue* is the more valuable option.

So, you should advise Dino to sue the dry cleaner, right? Not so fast.

Our decision tree grossly

Figure 2

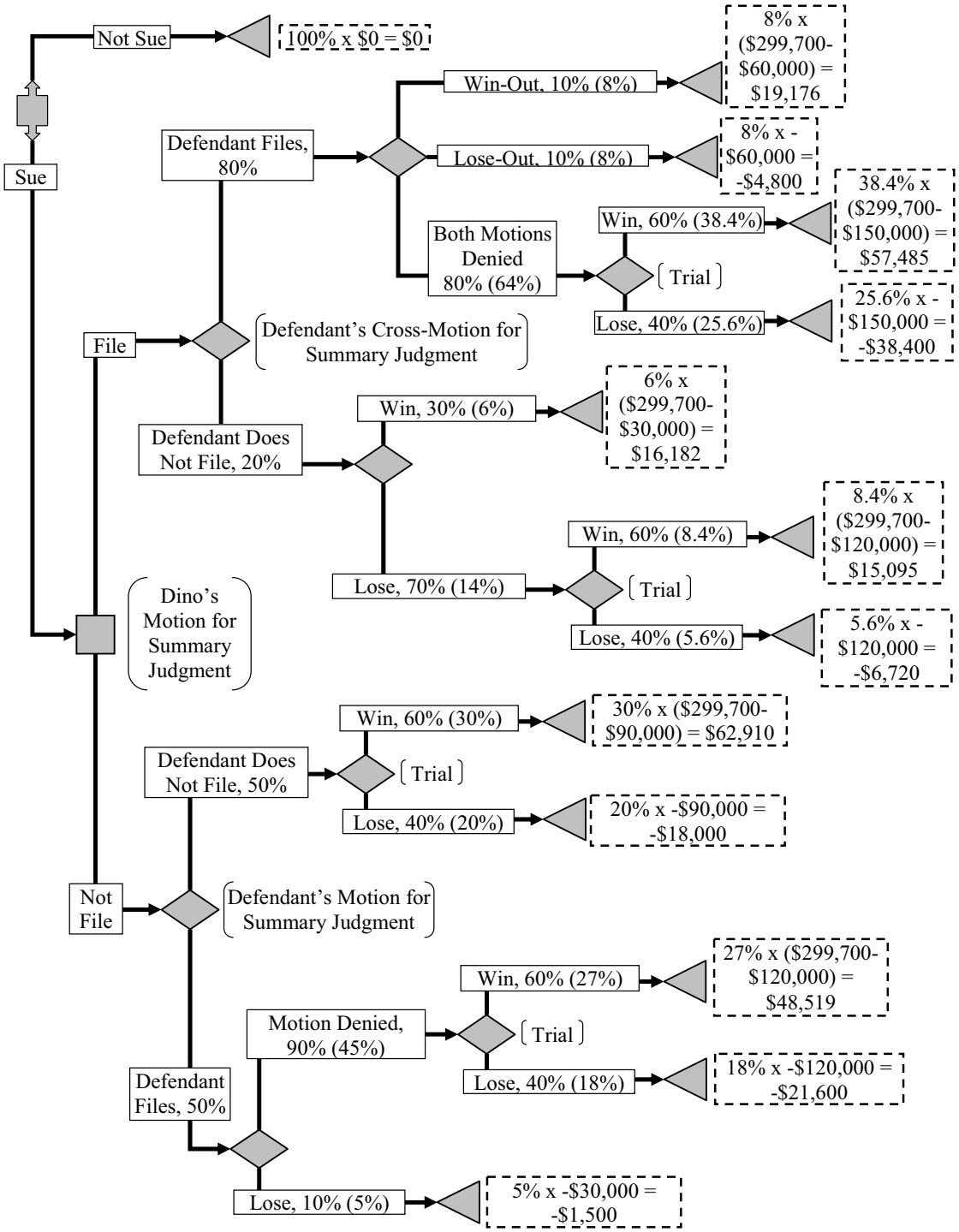

oversimplifies the situation. The tree set out in *Figure 2* should provide a more complete picture.

Dino's Second Tree

Figure 2 presents a more thorough analysis than *Figure 1*.

You still estimate that: (a) Dino has a 60% chance to win if the case goes to trial and a 40% chance of losing; and (b) Dino will incur $90,000 in attorneys' fees and litigation costs to try the case.

Now, however, we have added the possibility that Dino and/or DinDoit Dry Cleaners will file a motion for summary judgment. You estimate that Dino will incur $30,000 in attorneys' fees if one of the two parties files a motion for summary judgment, or $60,000 in fees if both of the parties file motions for summary judgment.

You undoubtedly noticed that the second decision tree has some other features which the first one lacked. First, you will notice some probabilities in parentheses. For example, let us say that Dino does *Not File* a *Motion for Summary*

Judgment, but the defendant does (note your estimate that there is a 50% chance that the defendant will file a motion for summary judgment if Dino does not file one). Our tree tells us that there is a "10% (5%)" chance that Dino will *Lose* the whole case on *Defendant's Motion for Summary Judgment*. What is with the "10% (5%)"?

Think of the two percentages in terms of two rules. In the following illustration, assume "Event A" represents the *Defendant filing a motion for summary judgment* and "Event B" represents Dino losing on the defendant's motion for summary judgment. The first rule applies to the first probability (the 10%): *If Event A occurs, there is a 10% chance that Event B will occur*. The second rule applies to the second probability (the 5%): *Assume that there is a 50% chance that Event A will occur and that there is a 10% chance that Event B will occur if Event A occurs. Therefore, multiplying the 50% by 10% results in a 5% overall chance that Event B will occur*. Note that *Event B will occur if and only if Event A occurs*—that is Dino can only lose the defendant's motion if the defendant, in fact, files that motion.

Second, you will also notice that *Trial* appears in the tree several times, with different values. If the case gets to trial, you have determined that Dino will have a 60% chance to *Win* and a 40% chance to *Lose*. The value of each trial result changes depending on the path that the case takes to get to trial, however, because: (a) the costs are different (it will cost Dino more to go through cross-motions for summary judgment and then trial than it will if Dino just goes straight to trial without any motions for summary judgment); and (b) the probability of each event in your decision tree affects the ultimate probability of each result.

Finally, based on the new decision tree, what should Dino do? Again, we find the answer by calculating the values of each branch. The value of each branch is the sum of its results.

The value of the *Not Sue* branch is still $0: there is no cost and no risk to Dino, but also no reward. The total value of the *Sue* branch in the second tree has actually increased from our first tree, from $89,820 to $128,347. Remember, the total value of a branch—here the *Sue* branch—is computed by summing the individual monetary values of each possible outcome on that branch. Accordingly, our tree still strongly favors *Sue* over *Not Sue*.

But, our analysis does not end there. Since we have determined that *Sue* is Dino's best option, we can then determine whether Dino should *File* or *Not File* a motion for summary judgment. Based upon our analysis, the *File* branch has an ultimate value of $58,018, while the *Not File* branch has a greater value of $70,329. Accordingly, our decision tree advises us to *Sue* but *Not File* a motion for summary judgment.

Creating Your Own Decision Trees. Decision trees can be relatively simple to create. While *Figure 2* might look somewhat complex at first blush, when you take it step-by-step it becomes straightforward.

When you are developing your next decision tree, use this simple process:

(1) Determine what the *status quo* is, which will be the starting point of your decision tree. For example, "My client has been sued."

(2) Determine what your realistic options are. These will be the first

branches of your decision tree. For example, "We could do four things: (a) not respond to the lawsuit; (b) offer settlement; (c) file a motion to dismiss; or (d) answer the complaint." Create a branch for each of these options.
(3) For each branch, determine the next "node," whether it will be a result, a decision, or an uncertain outcome. For example, for your "not respond to the lawsuit" branch, the next node may be a certain *result* of a default judgment; or for the "offer settlement" branch, the next node may be an *uncertain outcome*, with the branches "plaintiff accepts settlement" and "plaintiff rejects settlement."
(4) Keep adding branches and nodes until every branch ends in a *result*.
(5) Now, follow each branch and fill in probabilities for each *uncertain outcome* and values for each *result*.
(6) Total up the value of each branch, compare the totals, and there you go!

Final Thoughts. While decision trees can be very useful, they are all about educated guesses—they are not a crystal ball, which will foretell the outcome of your case. You may develop a decision tree, which overwhelmingly predicts odds in your favor; yet, you may lose on a motion to dismiss. Or, your decision tree may inform you that your best decision is easily not to sue, but your client insists on pressing forward. What are your ethical obligations in that event?

Decision trees require that you have a reasonable basis for determining the probability of an event occurring. If you are simply unable to assign a probability to an event, or if the probability you would use is just an arbitrary number picked out of thin air, then you are probably better off not using a decision tree. Assigning a random probability to an event will not be helpful, and will very likely lead to misleading results.

Decision trees are also based on generalities. Your decision tree could quickly become unmanageable if you attempted to map out every minute possibility in your case. You should consider "trimming" the nodes and branches of your tree to reflect only the most realistic possibilities and decisions. The risk, of course, is that you may trim away an event which will actually occur and will impact the structure of your tree.

For example, while *Figure 2* may be a much more detailed diagram than *Figure 1*, even *Figure 2* does not account for all of the possible choices and uncertainties. For example, it does not account for the possibilities of: (a) the defendant filing a motion to dismiss at the outset of the case; (b) the parties' settling right away; (c) an appeal by either or both parties after trial; or (d) a motion for summary judgment being granted as to some but not all counts, among other things. What do you do with your tree when an unplanned event occurs?

Revise your tree. A decision tree is not something you create at the beginning of your case and just refer back to as the case progresses. You should revise your decision tree as each significant event in the case unfolds, using the *status quo* as your starting point. You should trim branches or grow new ones as old possibilities fall away and new ones become apparent, and reset probabilities and values.

Decision trees are not useful in every case. For example, an experienced practitioner who encounters a relatively familiar fact

Continued on page 30

Watch Out Third Floor: The Bankruptcy Trustees are Lurking[1]

by Kent A. Gaertner

The interplay of divorce law and bankruptcy law has given rise to lots of litigation in the past and will continue to do so in the future. An excellent example of that interplay—that will certainly affect practice on the third floor of the DuPage County Courthouse — is the case of *In re Knippen*[3] decided by Judge Squires of the United States Bankruptcy Court for the Northern District of Illinois. This article will explore why *Knippen* makes it more difficult to avoid a Bankruptcy Trustee's action to overturn an Marital Settlement Agreement (MSA) when one party gets more "hard assets" than the other based upon a waiver of maintenance.[4]

"Given the current environment in the bankruptcy world, in which investigation of Debtor's transfers and assets are greatly increased, it is critical to anticipate the potential bankruptcy filing of your opponent's client when settling a divorce case."

***In re Knippen*: The Facts.** Debtor Kerry Knippen and his wife Jodi went through protracted divorce litigation from January 2002 until a judgment of dissolution was entered on September 30, 2004. Incorporated into the judgment of dissolution was a MSA entered into by the parties and approved by the Court. The MSA provided that Jodi was to receive the marital residence, which was valued at $208,000 by a recent appraisal. There were mortgages and liens against the house totaling approximately $160,000. In addition , Jodi retained ownership of her auto and her personal checking account.

The Debtor received an all-terrain vehicle, three other vehicles more than ten years old, two checking accounts, his tools and the 2003 income tax refund. He also retained 100% ownership of his small service business. No values were assigned to these assets in the MSA.

The liabilities were split with the Debtor and Jodi each being responsible for the credit cards in their individual names. Jodi was also responsible for unpaid promissory notes to her parents. Both Debtor and Jodi waived any right to maintenance against each other. Both testified at the prove up of the divorce that they believed the MSA fairly and equitably divided the marital estate.

Upon entry of the judgment of dissolution, the Debtor executed a quit claim deed to Jodi, which was recorded on October 28, 2004. Shortly thereafter, Jodi sold the house to her parents by warranty deed dated November 10, 2004. The purchase price was $200,000. The funds were escrowed and used to pay the monthly mortgage payments on the house, Jodi's monthly rent, and other debts arising from the dissolution proceeding. Jodi and her children continued to live in the property and rent from her parents.

Kent A. Gaertner *is a partner in the Wheaton law firm of Springer, Brown, Covey, Gaertner and Davis LLC. The firm practices exclusively in the areas of bankruptcy, reorganizations, and workouts representing debtors, creditors and bankruptcy trustees. Mr. Gaertner has been the Chairperson of the DCBA Bankruptcy Committee on several occasions and is a regular contributor to The Brief. Mr. Gaertner is currently the Second Vice President of the DCBA and has previously served for five years as a Director of the DCBA.*

On April 28, 2005, the Debtor filed his Chapter 7 petition. The value of his personal property was listed on the petition, in the total amount of $8453.33. His 100% ownership interest in his business was listed as having a value of zero. He listed monthly income as approximately $1600 net per month and expenses of approximately $5580 per month. The debts listed on his petition totaled $69,046.52, all unsecured.

The Trustee brought a five count adversary proceeding against Jodi and her parents, alleging that the transfer of the marital residence was a fraudulent conveyance, under section 548 (a) and 550 (a) of the Bankruptcy Code[5] and also under sections 5, 6, and 9 of the Illinois Uniform Fraudulent Transfer Act.[6]

The Law on Fraudulent Trans-fers. Section 548 of the Bankruptcy Code[7] allows the Trustee to recover pre-petition fraudulent transfers of the Debtor's property.

THE JOHN MARSHALL LAW SCHOOL | CENTER FOR INFORMATION TECHNOLOGY AND PRIVACY LAW

Attorney CLE Program:

Gateways and Barriers to Law Practice Marketing Through Technology

FRIDAY | NOV.16, 2007 | 11:30 A.M. TO 5 P.M.

>> This extended course will have attorneys examining the use of the Internet as a tool for client development. Participants will explore the policies that govern Internet use for legal business. Attorneys will learn to design a strategic marketing plan that maximizes the use of technology within ethical parameters and is consistent with ideals of professionalism.

Topics include: strategic marketing within the context of state rules of professional conduct; the definition and application of commercial speech; issues of law firm websites, including on-line in-take, social networking sites and harvesting data and follow-up; spam; blogs and e-mail content; and standards for participating in group advertising and online referral services. Each topic will be examined from the perspectives of marketing effectiveness, ethical compliance and professionalism with the cultures of various legal practices. <<

This course is offered for four CLE credits. The John Marshall Law School will advise the appropriate state bar or agency indicated below of the presentation of this conference. The extension of CLE credit is subject to each state's approval. The law school has applied for four Professional Responsibility CLE credits. It is the responsibility of the individual to meet the requirements of each jurisdiction. The John Marshall Law School is an approved MCLE provider with the State Bars of California, Illinois, Missouri, Pennsylvania, and Wisconsin. The John Marshall Law School will assist with applications to Florida, Georgia, Rhode Island, and Texas, but attorneys must apply individually for credit for courses and submit payment directly to these states. This extended course will have attorneys examining the use of the Internet as a tool for client development. Participants will explore the policies that govern Internet use for legal business. Attorneys will learn to design a strategic marketing plan that maximizes the use of technology within ethical parameters and is consistent with ideals of professionalism.

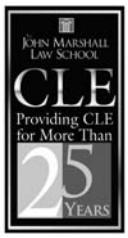

THE FEE FOR THIS PROGRAM IS $60.00.

THE JOHN MARSHALL LAW SCHOOL®

315 S. Plymouth Court | Chicago, Illinois 60604 | 312.987.1420 | www.jmls.edu

Subsection 548(a)(1)(A) allows the avoidance of a transfer where the creditor had an "actual intent to hinder, delay, or defraud" a creditor. Because "actual intent" is the operative factor for the cause of action under 548(a)(1)(A), it is referred to as an "actual fraud" count.[8] Section 548(a)(1)(B), on the other hand, has no element of intent and is therefore referred to as "constructive fraud."

In an "actual fraud" count, the state of mind of the Debtor is at issue. Does he have actual intent? If so, malice or insolvency of Debtor is not required. Likewise, there need be no culpability on the part of the recipient on the transfer. The adequacy or equivalency of the consideration paid by the transferee is also not an issue in an actual fraud count.

Conversely, in the "constructive fraud" count, the Debtor's intent is immaterial.[9] The issue is solely the adequacy or equivalency of the consideration coupled to insolvency or the inability to pay debts as they mature.[10] When the court lacks direct evidence of fraud, circumstantial evidence may be used under section 548(a)(1)(A). The courts refer to this circumstantial evidence as "badges of fraud". These badges include: "(1) absconding with the proceeds of the transfer immediately after their receipt; (2) absence of consideration when the transferor and transferee knew that outstanding creditors would not be paid; (3) a huge disparity in value between the property transferred and the consideration received; (4) the fact that the transferee is or was an officer, agent, or creditor of an officer of the corporate transferor; (5) insolvency of the debtor; and (6) the existence of a special relationship between the debtor and the transferee."[11] The court will then apply the "badges of fraud" analysis to the facts of the case to determine whether "actual intent" existed, thereby rendering the transfer fraudulent under section 548 (a)(1)(A).

To prove "constructive fraud" under section 548(a)(1)(B), the trustee must establish the following elements by a preponderance of the evidence: (1) a transfer of the Debtor's property or interest therein; (2) made within one year of the filing of the bankruptcy petition; (3) for which the Debtor received less than a reasonably equivalent value in exchange for the transfer; and (4) either (a) the Debtor was insolvent when the transfer was made or he was rendered insolvent thereby; or (b) the Debtor was engaged or about to become engaged in business or a transaction for which his remaining property represented an unreasonably small capital; or (c) the Debtor intended to incur debts beyond his ability to repay them as they matured.[12]

The receipt by the Debtor of less than a reasonable equivalent value is critical to the finding of constructive fraud. The test to determine "reasonably equivalent value" requires the Court to determine the value of what was transferred against the value of what was received.[13] The factors used in determining reasonably equivalent value include: (1) whether the value of what was transferred is equal to the value of what was received; (2) the fair market value of what was transferred and received; (3) whether the transaction took place at arm's length; and (4) the good faith of the transferee.[14]

If it is established that the transfer was for less than the reasonably equivalent value and the Debtor was insolvent at the time (or the transfer rendered him insolvent) or he intended to incur, or believed he would incur, debts beyond his ability to pay as they mature, the Court can find "constructive fraud" and avoid the transfer without reference to the intent of the Debtor.

The Trustee is also, under section 544(b)(1)[15], allowed to avoid a fraudulent transfer under applicable state law. In Illinois, that law is the Illinois Uniform Fraudulent Transfer Act (UFTA).[16] Sections five and six of that Act are similar to section 548 of the Bankruptcy Code. The main difference is that under section 548 the transfer to be avoided must have occurred within one year of the filing of the Petition. Under the Illinois UFTA, the time frame extends to four years.

Lastly, after the transfer is avoided under either section 548 (a)(1)(A) or 548(a)(1)(B) or the Illinois UFTA, the Trustee can then use section 550(a) of the code to recover the value of the transfer from the initial transferee or the immediate or mediate transferee of the initial transferee.

***In re Knippen*: The Result.** The Court reviewed the facts of the case in light of both "actual fraud" elements and "constructive fraud" elements. The Court found the following three of six badges of fraud existed for the actual fraud count: (1) a special relationship between the Debtor and the transferee; (2) the Debtor was insolvent at the time of the transfer and; (3) a large disparity of value existed between what the transferee received (i.e. the house) and what the Debtor received .

The Court determined that the Debtor's property listed in his schedules totaled only $8,453 while his scheduled debt was approximately $69,000. His income was approximately $1600 per month net while his expenses were approximately $5500 per month. Hence, the Court concluded the Debtor was insolvent at the time of the transfer or was rendered insolvent due to the transfer.

The Court also found, based upon the evidence and the testimony, that the Debtor's one-half

LAW OFFICES

DiTommaso ♦ Lubin

CLASS ACTION LITIGATION

In our prosecution and defense of class actions throughout the United States in Federal and State Courts, we are proud of our recent accomplishments, which include the following:

Recent Class Actions

Dale v. Daimler-Chrysler
Court certified Missouri wide class action alleging Magnuson Moss and Missouri consumer fraud violations arising from selling defective automobiles. Missouri court of appeals affirmed class certification. (204 SW3d 151)

S37 Management, Inc. v. Advance Refrigeration, Inc.
Claims involving allegedly deceptively labeled, non-tax charges called government processing fee in the tax line of customer bills when allegedly no such gov't fees are mandated.

Terrill v. Hilton
Court certified a class of all customers of Hilton's Oakbrook Terrace Hotels. Following successful interlocutory appeal (788 NE2d 789), judgment in favor of the class for all damages, prejudgment interest and attorneys fees. Affirmed on appeal.

Erickson v. Ameritech
Court certified consumer fraud claims for failure to disclose hidden voice mail charges. In 2005, Crain's Chicago Business listed this settlement as the third highest settlement/verdict in Illinois.

Defense
Defended national marketing company in Fair Credit Reporting Act class claims seeking $100,0000,000 brought in federal court. Defended national residential rental chain in consumer fraud claims. Continue to defend a number of large to mid-size companies in class claims throughout the country.

We are also Investigating the Following Potential Claims

Manufacturers, retailers and advertisers who materially misrepresent how a product works or performs.

Improper fees added to collection letters when such fees are not provided for in the underlying contract.

Closing and other related fees that are not authorized by the notes or contracts.

Excessive late fees charged by rental apartment complexes, including late fees on common area utility bills, rent payment bills and assessments.

Vitamin and supplement fraud where supplements are missing the active ingredient or do not perform as represented.

Areas of Interest:
Healthcare Product Fraud
Defective Car & Vehicle Products
Insurance Fraud
Fair Credit Reporting Act – FCRA
Privacy Violations
Vacation Scams
Excessive Late Charges
Wage & Hour Overtime Violations
Infomercials & Deceptive Advertising

DiTommaso Lubin, P.C. | Principal Counsel: Vincent L. DiTommaso, Peter S. Lubin and Brian C. Witter
17 W. 220 22nd Street, Suite 200 | Oakbrook Terrace, Illinois 60181 | Tel: 630-333-0000 | Fax: 630-333-0333
E-mail: classaction@ditommasolaw.com | www.ditommasolaw.com

interest in the property was $28,500. The property he received in exchange for his transfer of his one-half interest was approximately $8500 based on the value of the assets listed in his schedules. The difference of $20,000 represented a significant disparity in the value of the property transferred.

Despite finding that three of the six badges of fraud existed, the Court declined to avoid the transfer based upon the actual fraud count under section 548(a)(1)(A). However, the Court did find that the Trustee proved all four elements of the constructive fraud count by showing the Debtor: (1) transferred the property, (2) within one year of the filing of the petition, (3) for less than reasonably equivalent value (i.e. the Debtor received $8500 in assets in exchange for Jodi receiving $28,500 in assets), and (4) the Debtor was insolvent at the time of the transfer or was rendered insolvent by the transfer. Note that under the Illinois UFTA, element two could have been extended out to four years with the same result.[17]

Since the transfer was voided under Section 548(a)(1)(B) as constructive fraud, the Court ordered, under Section 550(a)(2), the return of $20,000 from the parents. The parents defended stating that under section 550(b), they paid fair value for the property, in good faith, and without knowledge of the avoidability of the transfer.[18] The Court agreed that they took for fair value and in good faith, but found that they were deemed to have knowledge of the avoidability of the transfer. The Court found that their knowledge of the financial circumstances of the Debtor and their daughter Jodi constituted sufficient knowledge to constitute an awareness of the avoidability of the transfer.

Jodi Knippen and her parents appealed the decision. U.S. District Court Judge Suzanne B. Conlon affirmed the Bankruptcy Court's decision in all respects.[19] One issue Judge Conlon noted is of particular importance. Counsel for Jodi Knippen argued on appeal that Jodi's waiver of maintenance should have been included in the calculation as to whether she had given equivalent value to her husband in exchange for the house. Judge Conlon rejected the argument stating that not only was there no evidence of the value of the waiver presented to the trial court. More importantly, however, she pointed out that even if evidence of the value of the waiver were presented, the bankruptcy court could not have considered the issue because an unperformed promise for future support does not constitute value in determining reasonable equivalence.[20]

THE LESSONS

Lesson #1: State the Value of All Assets in the MSA. When concluding an MSA, it is essential that the values of all assets affected be stated and carefully documented. Valuations must be given to business interests based upon sound accounting principles. Values should be assigned to the assumption of debt. In this case, the MSA did not contain detailed valu-ations of assets including the interest of the Debtor in his business.

Lesson #2: Assign Only Defendable Values. If one spouse is getting significantly more than the other, a subsequent bankruptcy filing by the "generous" spouse will result in the effective dismemberment of the MSA by the bankruptcy trustee. This will open the door to future post-decree litigation for the spouse who had to disgorge the assets originally received. A practitioner should find a way to assign defendable values to all the assets to even out the distribution between the spouses. This becomes particularly challeng-ing when the value of the waiver of maintenance cannot be used to level the distribution.[21]

Lesson #3: Do Not Inflate Asset Values. The values assigned to the assets in the MSA are going to be proof of value in a subsequent bankruptcy petition filed within a reasonable period of time thereafter. Don't plan on inflating values on the MSA and then claim the same asset is worth little or nothing in a subsequent bankruptcy petition a year later.

Lesson #4: Know the Pitfalls of Waiving Maintenance in Exchange for Hard Assets. The next time a new divorce client shows up at your office and says "just give her everything. I don't care and just want it to be over with!" Remember, that's no longer as simple as it sounds.

Given the current environment in the bankruptcy world, in which investigation of Debtor's transfers and assets are greatly increased, it is critical to anticipate the potential bankruptcy filing of your opponent's client when settling a divorce case. In the divorce arena, waivers of maintenance are frequently given in exchange for additional "hard assets." Given Judge Conlon's ruling that a waiver of maintenance cannot be considered in determining reasonably equivalent value for a transfer, it becomes difficult to avoid a Trustee's action to overturn an MSA when one party gets more "hard assets" than the other based upon a waiver of maintenance. It looks like the drafting of MSA's just got a lot harder for my colleagues on the third floor and a target rich environment has opened for the panel trustees in the Northern District of Illinois. ■

[1] For those of you who do not practice family law in DuPage County, IL, the

ATG LEGAL EDUCATION

October 2007

ATG and its subsidiaries, ATG Trust Company and Capital Funding Corporation, provide lawyers with quality educational programs. We are enhancing our programs and upgrading our delivery systems so we can offer a variety of ways for you to meet CLE requirements and improve your real estate, title insurance and estate planning legal skills.

SPECIAL ATTORNEY DISCOUNTS:

Purchase ATG Legal Education CLE programs scheduled through June 30, 2009, for an affordable, flat fee.

For details, program dates, and more, visit www.atgf.com and click the "ATG Legal Education" logo.

100%

The number of first-time attendees who said they would attend another Connect seminar!

NOTE: This list is subject to change as speakers, dates, and venues are confirmed. Please visit www.atgf.com regularly and click the ATG Legal Education logo for current information.

October 3 | Fairview Heights
October 4 | Lisle
Check-in: 8:00 a.m.
Program: 8:30 a.m. -12 noon
(3.5 CLE hours)

Real Estate Fundamentals Session 3: The Closing Process

The third in ATG's *Real Estate Fundamentals* series draws on 25-years of Underwriting Department experience. Our expert speakers cover key topics and difficult issues surrounding the closing process. *An ATG program.*

October 3 | Lombard
Check-in: 8:45 a.m.
Program: 9:00 a.m. - 2:30 p.m.
(3.5 CLE hours)

Basic Loan Origination

A Mortgage 101 class on providing clients with mortgage products tailored to their needs while earning fees separate and apart from your customary legal fees. *A* CFC *program.*

October 13 | Chicago
Check-in: 9:00 a.m.
Program: 9:15 a.m. - 3:15 p.m.
(5.0 CLE hours)

Navigating a Real Estate Transaction

Build a strong background for your real estate practice by gaining the knowledge, confidence, and tools you need to represent clients. Experienced real estate practitioners will navigate a typical real estate transaction. *An ATG program*

October 17 | Champaign
Check-in: 8:00 a.m.
Program: 8:30 a.m. - 12 noon
(3.25 CLE hours)

Asset Protection Planning

An introductory exploration of contemporary wealth protection planning methods, including domestic entities in conjunction with foreign *situs* asset protection trusts. *An ATG Trust program.*

October 17 | Champaign
Check-in: 12:30 p.m.
Program: 1:00 - 4:30 p.m.
(3.25 CLE hours)

Basic § 1031 "Starker" Tax-Deferred Exchanges

Help your clients increase their wealth using one of the few tax strategies available to people of virtually any income level. *An ATG Trust program.*

October 24 | Oak Brook
Check-in: 7:45 a.m.
Program: 8:15 a.m. - 12 noon
(3.5 CLE hours)

Representing Real Estate Clients in Today's Market

How to develop a real estate practice for the For Sale By Owner (FSBO) market and how to best work with Realtors.® *An ATG program.*

ATG Legal Ed *Connect* On-Line Program:

Real-time classes via the Internet. Gain CLE credit from your office!

October 9
Log-in: 11:50 a.m. - 12 noon
Program: 12 noon - 1:30 p.m.
(1.5 CLE hours)

Administration of Supplemental Needs Trusts

When to use and how to administer these specialized trusts. Topics include trustee discretionary distribution powers, income tax considerations, and expense reimbursement.

800.252.0402
WWW.ATGF.COM

Champaign | Chicago Loop | Chicago North Side
Homewood | Libertyville | Lombard | Mt. Prospect
North Riverside | Oak Lawn | Schaumburg
Wheaton | Belleville | Madison, Wis.

ATTORNEYS' TITLE GUARANTY FUND, INC.

DECISION TREES

Continued from page 22

pattern may not need a decision tree to be able to make an educated estimate regarding how the case will play out. At the opposite extreme, however, even experienced class action practitioners may find decision trees useful in mapping out litigation strategy in complex cases.

Decision trees can be useful far beyond determining whether to sue. They can be used by defendants in determining whether to offer settlement or gear up for trial; by businesspersons in deal-making; and by computer scientists in developing "artificial intelligence" algorithms. If you are really motivated, you can use a decision tree to assist you with just about any decision, such as what to eat for breakfast, or whether to buy a sports car.

If you are interested in learning more about decision trees or other decision-making models, there are numerous books and articles published on the topic. The simplest way to create a decision tree is the tried-and-true pencil and paper method. Alternatively, a number of computer programs can assist you with the task, such as Microsoft Word or a variety of more specialized decision-modeling applications.

Conclusion. As you and Dino wrap up your lunch-turned-strategy session, he tells you, "I agree with you wholeheartedly—let's sue DinDoit, but hold off on summary judgment. I prefer my chances going straight to trial. Also, I'm so impressed with the thought you've put into my case, I'll buy lunch."

Thanks to your decision tree, you have earned your client's respect, and saved yourself fifteen dollars. Nice work, counselor. ■

third floor of the DuPage County Courthouse is home to the Domestic Relations Division of Eighteenth Judicial Circuit Court, DuPage County, Wheaton, IL. It is there that many of my brethren at the Bar toil to bring sanity and justice to one of the most emotionally difficult areas of the law.

[3] 355 B.R. 710 (Bankr. N.D. Ill. 2006).

[4] *Knippen v. Grochocinski*, Civil Action No. 07 C 1697, 2007 WL 1498906, 2007 U.S.Dist. LEXIS 36790 (N.D.Ill.,2007).

[5] 11 U.S.C. 548(a), 555(a) (West 2006).

[6] 740 ILCS 160/5, 6, 9(b) (West 2006).

[7] 11 U.S.C. 548. Section 548(a)(1) of the Bankruptcy Code provides as follows:

(a)(1) The trustee may avoid any transfer of an interest of the debtor in property, or any obligation incurred by the debtor, that was made or incurred on or within one year before the date of the filing of the petition if the debtor voluntarily or involuntarily-

(A) made such transfer or incurred such obligation with actual intent to hinder, delay, or defraud any entity to which the debtor was or became, on or after the date that such transfer was made or such obligation was incurred, indebted; or

(B)(i) received less than a reasonably equivalent value in exchange for such transfer or obligation; and

(ii)(I) was insolvent on the date that such transfer was made or such obligation was incurred, or became insolvent as a result of such transfer or obligation;

(II)was engaged in business or a transaction, or was about to engage in business or a transaction, for which any property remaining with the debtor was an unreasonably small capital; or

(III) intended to incur, or believed that the debtor would incur, debts that would be beyond the debtor's ability to pay as such debts matured.

11 U.S.C. § 548 (a)(1)

[8] *In the Matter of FBN Food Services, Inc.*, 82 F3rd 1387, 1394 (7th Cir.-1996).

[9] *Id.*

[10] *In re Cohen*, 199 B.R. 709, 716-717 (B.A.P. 9th Cir. 1996)

[11] In re Roti, 271 B.R. 281, 294 (Bankr. N.D. Ill. 2002).

[12] 11 U.S.C.A. § 548(a)(1)(B) (West 2006); *Wieboldt Stores, Inc., v. Schottenstein*, 94 B.R. 488, 505 (N.D. Ill. 1988); *In re Dunbar*, 313 B.R. 430, 434 (Bankr. C.D. Ill. 2004); see also *Dunham v. Kisak*, 192 F.3d 1104, 1109 (7th Cir. 1999).

[13] *Barber v. Golden Seed Co.* 129 F3rd 382, 387 (7th Cir. 1997).

[14] *In re Apex Auto. Warehouse, L.P.*, 238 B.R. 758, 773 (Bankr. N.D. Ill. 1999).

[15] 11 U.S.C. § 544(b)(1) provides in pertinent part as follows:

> [T]he trustee may avoid any transfer of an interest of the debtor in property... that is voidable under applicable law by a creditor holding an unsecured claim that is allowable under section 502 of this title or that is not allowable only under section 502 (e) of this title.

11 U.S.C. § 544 (b)(1). This section expressly authorizes a trustee to avoid a transfer voidable under applicable state law.

[16] 740 ILCS 160/1 *et. seq.* (West 2006).

[17] Although Judge Squires ultimately found that the transfer constituted constructive fraud under Section 548 (a)(1)(B), the opinion contains a detailed and excellent discussion of the applicable sections of the Illinois Uniform Fraudulent Transfer Act (UFTA), 740 ICLS 160/5, 160/6 and 160/9 (b) and what the Trustee would have to prove if he attempted to overturn a fraudulent transfer more than one year after the filing of the Petition using Section 544 (b)(1) and UFTA in combination. The reader is strongly encouraged to read Judge Squires opinion in full.

[18] Section 550 (a) and (b) provide in pertinent part:

(a)Except as otherwise provided in this section, to the extent that a transfer is avoided under section...548... of this title, the trustee may recover, for the benefit of the estate, the property transferred, or, if the court so orders, the value of such property, from –

(1)the initial transferee of such transfer or the entity for whose benefit such transfer was made; or

(2) any immediate or mediate transferee of such initial transferee.

(b)The trustee may not recover under section (a)(2) of this section from-

(1)a transferee that takes for value, including satisfaction or securing of a present or antecedent debt, in good faith, and without knowledge of the voidability of the transfer avoided; or

(2)any immediate or mediate good faith transferee of such transferee.

11 U.S.C. § 550 (a) and (b)

[19] *Knippen v. Grochocinski*, Civil Action No. 07 C 1697, 2007 WL 1498906, 2007 U.S.Dist. LEXIS 36790 (N.D.Ill.,2007).

[20] *Id.* (citing *In re Mussa*, 215 B.R. 158, 172 (Bankr. N.D. Ill. 1997)).

[21] *Id.*

- October 11— **Academy of Bar Leaders: Session 2** *(sold out)*
- October 13 — **Civil Law Seminar**
- October 20 — **GAL Training for Adoption Attorneys**
- November 8 — **Academy of Bar Leaders: Session 3** *(sold out)*
- November 30, December 1 & 7 — **Basic Skills for New Attorneys**
- January 20-27 — **The Law Boat**

Accredited MCLE Provider

REMINDER: Illinois attorneys whose last names begin with A-M must complete a minimum of 20 hours of MCLE, including at least 4 professional responsibility hours, by June 30, 2008. Those whose last names begin with N-Z must complete a minimum of 20 MCLE hours, including at least 4 professional responsibility hours, by June 30, 2009.

When are Internet Communications not "Electronic Communications" under the Illinois Eavesdropping Statute?

by Eric R. Waltmire

There are numerous accounts of law enforcement authorities entering Internet chat rooms, posing as children to catch predators soliciting children for sex. When a police officer saves an Internet chat room conversation with a person suspected of soliciting children for sex, does he or she violate the Illinois eavesdropping statute? What if a minor saves and later voluntarily turns over to the police an incriminating chat room conversation with a suspected predator? An article in the May 2004 issue of the Illinois Bar Journal indicated saving a copy of the conversation might constitute eavesdropping if done without a warrant.[2] But, a closer analysis of the statutory definition of "electronic communication," finds the eavesdropping statute is not violated in these scenarios. This conclusion is supported by the First District Illinois Appellate Court's decision in *People v. Gariano*.[3] However, the analysis in this article goes further and addresses why the arguments provided in the dissent are not compelling.

The Illinois Eavesdropping statute states, in part:

> A person commits **eavesdropping** when he: (1) Knowingly and intentionally uses an eavesdropping device for the purpose of hearing or recording all or any part of any conversation or intercepts, retains, or transcribes electronic communication unless he does so (A) with the consent of all of the parties to such conversation or electronic communication . . .[4]

The statute defines "conversation" as "any oral communication . . . "[5] The statute provides eavesdropping is a felony and evidence obtained in violation of the statute is not admissible in any civil or criminal trial.[6]

"The e-mail sender had a reasonable expectation the message would not be intercepted by the police without a warrant, but once the message was received by the intended recipient, 'the transmitter no longer control[ed] its destiny.' "

Oral Communications

In *People v. Beardsley*,[7] the Illinois Supreme Court addressed whether the surreptitious recording of a conversation between two police officers constituted the crime of eavesdropping. There, the defendant was placed in the back of the police car and subsequently arrested. The defendant surreptitiously recorded the conversation of the two officers that sat in the front seat. The officers claimed they did not know of or authorize the recording, although they knew the defendant possessed a tape recorder. The court noted where the party making the recording is a party to the conversation; the recording party could not be prohibited from repeating what he was told by the declarant. The court found when a party to a conversation makes a recording of the conversation the recording is simply a means of preserving an accurate record of what was said.[8] Despite the language of section 14-2(a)(1)(A) of the eaves-

***Eric Waltmire** is a staff attorney at the Eighteenth Judicial Circuit Court of Illinois. He recently passed the United States Patent Bar Examination and expects to be registered as a patent attorney with the United States Patent and Trademark Office by the end of September. Eric has a computer science background and specializes in software and electronic technology patents. When his term ends with the court near the end of October, Eric will focus his law practice on patent prosecution and patent litigation. He maintains a website, www.waltmire.com, where he reports on developments in intellectual property law. Eric obtained his Juris Doctor,* magna cum laude, *from Southern Illinois University School of Law and his Bachelor of Science from Southern Illinois University majoring in computer science with a minor in business and math.*

DuPage County Bar Association
126 S. County Farm Road, Wheaton, IL 60187
Tele: 630-653-7779 Fax: 630-653-7870 www.dcba.org

Basic Skills Training Program - 15 Hours in Three Sessions

FRIDAY, NOVEMBER 30, 2007; DCBA Classroom, 126 S. County Farm Road, Wheaton, IL

11:00 a.m. Registration, & Lunch
11:45-1:15 p.m. Traffic Court – Speaker: **Stacey A. McCullough, Wheaton, IL**
1:15-2:15 p.m. Juvenile Court – Speaker: **Chantelle Jackson, Wheaton, IL**
2:15-2:30 p.m. Break
2:30-3:30 p.m. Misdemeanor Court-Speakers: **Mark E. Kowalczyk, Glen Ellyn, IL & Frank J. DeSalvo, Wheaton, IL**
3:30-4:00 p.m. Small Claims Court, Post Judgment Collections– **Speaker: Patrick Edgerton, West Chicago, IL**
4:00-5:00 p.m. Real Estate Law – Speaker**: Mary E. McSwain , Wheaton, IL**

SATURDAY, DECEMBER 1, 2007; Attorney Resource Center, Judicial Center, 505 N. County Farm Road, Wheaton, IL

8:30-9:00 a.m. Registration & Continental Breakfast
9:00-10:00 a.m. Stress Management, Networking, and Diversifying-**Speaker: Brigid A. Duffield, Wheaton, IL**
10:00-11:00 a.m. Starting Up Your Law Office; Opening & Closing Files, Record Retention – **Speaker: Maria Tolva Mack, Westmont, IL**
11:00-11:15 a.m. Break
11:15-12:15 p.m. Fee Agreements, Communications, Documentation-Speaker: **Richard D. Russo, Wheaton, IL**
12:15-1:15 p.m. Lunch Break
1:15-2:15 p.m. Operating & Trust Accounts, IOLTA, Malpractice Insurance Speaker: **Richard D. Kuhn, Naperville, IL**
2:15-3:15 p.m. Billing & Conflict of Interest –**Speaker: Mark W. Monroe, Downers Grove, IL**

FRIDAY, DECEMBER 7, 2007; Attorney Resource Center, 505 N. County Farm Road, Wheaton, IL

11:00-12:00 p.m. Registration & Lunch
12:00-1:00 p.m. Civil Law – Speaker: **Kimberly A. Davis, Downers Grove, IL**
- Drafting pleadings
- Discovery
- Depositions
- Admissions of Fact
- Pretrial conference/procedure

1:00-2:00 p.m. Wills & Chancery – Speaker: **Cynthia Hayes Hutchins, Wheaton, IL**
- Simple Wills
- Using Trusts

2:00-2:15 p.m. Break
2:15-3:15 p.m. Basic Adoption, Name Changes & Guardianships – Speaker: **Sean McCumber, Wheaton, IL**
3:15-4:15 p.m. Divorce Basics Speakers: **Angel Traub, Lombard, IL & Wm. J. Scott, Wheaton, IL**
- Petitions
- Interim Custody & Support
- Interrogatories
- Custody Issues & Who Gets the Dog
- Financials
- Elementary QDROS
- Martial Settlement Agreements
- Entry of Judgment

2:00-3:00 p.m. Labor & Employment – Speaker: **Ross I. Molho, Wheaton, IL**
- Discrimination Issues
- EEOC
- Illinois Dept. of Human Rights

Open Forum Q & A

New Lawyers Fee: $25 per session-DCBA members admitted to practice 1-3 years. All Others: $75.00 per session.
2007 admittees are required to attend all three sessions.

_____ **November 30, DuPage County Bar Center Classroom**

_____ **December 1, DuPage County Bar Center Classroom**

_____ **December 7, Attorney Resource Center ~ Third Floor, DuPage Judicial Center**

ARDC Number required for MCLE Certification

Name: _____ARDC#_____

Address:_____

Tele_____ Fax:_____ CK #_____

Visa/MC/AMX No._____Exp date_____

dropping statute, the court found there is no eavesdropping in that situation because the declarant had no expectation of privacy in what he told the recording party.[9] The court found the police had no legitimate expectation of privacy with respect to their conversation because they conversed in the defendant's obvious presences.[10]

In 1994, the Illinois legislature overruled *Beardsley* when it created the subsection defining "conversation" as "any oral communication between 2 or more person regardless of whether one or more of the parties intended their communication to be of a private nature under circumstances justifying that expectation."[11] It broadened eavesdropping coverage to include all conversation regardless of whether the parties to the conversation had an expectation of privacy.[12]

Electronic Communications. Effective January 2000, the legislature amended the eavesdropping statute to prohibit electronic communications from being intercepted, recorded, or transcribed.[13] The Act added the following definition of "electronic communication" to the statute:

> any transfer of signs, signals, writing, images, sounds, data, or intelligence of any nature transmitted in whole or part by a wire, radio, pager, computer, electromagnetic, photo electronic or photo optical system, where [1] the *sending and receiving parties intend* the electronic communication to be private and [2] the interception, recording, or transcription of the electronic communication is accomplished by a device in a surreptitious manner contrary to the provisions of this Article.[14]

The amendment was proposed in response to a problem with street gangs in Cook County. Gang members were cloning[15] electronic devises such as pagers and cellular phones to determine which gang members were working as informants for the police.[16]

In *People v. Gariano*,[17] the First District Illinois Appellate court held that the trial court did not error in refusing to suppress transcripts of instant message chat sessions between an undercover police officer and the defendant. There, during several instant message chat sessions between the defendant and the officer who posed as a 15 year-old boy, the defendant arranged to meet the officer for the purpose of having sex.[18] The defendant claimed the recording and transcribing of chat sessions violated the eavesdropping statute. The officer testified that he never intended that the instant message communications with the defendant would be private.[19] Therefore, the majority in *Gariano* concluded the communications were not "electronic communications" within the meaning of the eavesdropping statute, notwithstanding the common use of the term. As a result the officer did not violate the statute.[20]

In Justice Neville's dissent, he claimed the majority erred in construing the "intent" language in the definition of "electronic communications."[21] He relied, in part, on Representative Fritchey's statement on the Illinois House of Representative Floor: "The only change that we made from the time this Bill flew out of the House was there was intent language that was put in which was lacking before. And at the request of the State Police the . . . what they tried to do was avoid intentional over hears to make it that it was the interception of an electronic communication that is prohibited."[22] That is Fitchey's direct quote from the House floor, which is not very clear. Justice Neville concluded that Fritchey's

DCBA MEMBER MILESTONES

Welcome New Members: *Jacqueline M. Aldrich*, Kreiter and Gibbons & Associates in Chicago... *David Barry* of Des Plaines... J. Steven Butkus of Guerard, Kalina & Butkus in Wheaton... *John P. Carroll of Naperville... David R. Haskins*, Foote, Meyers, Mielke & Flowers in Geneva... *Robert N. Honig* of Elmhurst... *Jeffrey S. Hood* of Advanced Equities, Inc. in Chicago... *Roger G. Kotecki* of Amburgey & Associates in St. Charles... *R. Tor Liimatainen* of Nalco in Naperville... *Matthew R. Roeschley* of Ottosen, Britz, Kelly, Cooper et al in Elburn... *Dale P. Shrallow* of BP America. in Warrenville... *Caroline Waid* of Glen Ellyn... *Michael Webster* of Webster and Schelli in Naperville... *Christina C. Wiste* of Prairie State Legal Services in Carol Stream.

New Associate Members: *Mary Valadez* of Nalco Company in Naperville.

Welcome Law Students: *John Humpherys* of Chicago Kent College of Law... *Kristopher Piereth* of The John Marshall Law School.

Thank you to: Our September Attorney Resource Center coffee sponsor: *Steven B. Levy, Ltd.*

Have you recently changed law firms? Received an award? Send your news to the DuPage County Bar Association (126 S. County Farm Rd, Wheaton, IL 60187 or bar@dcba.org) by the 1st of the month. Space is limited.

statement, in part, indicated the statute was violated when police use an eavesdropping device to intercept an electronic communication. Further, Justice Neville concluded that Fritchey's statement made clear that an officer's subjective intent does not determine whether the communication was an "electronic communication."

The changes recognized by Representative Fritchey were those of Senate Amendment Three (SA3). It is best to compare the bill before amendment to the bill after the amendment to determine what the legislature intended. Before the amendment the bill did not contain a definition of "electronic communication." Instead it amended the definition of "conversation" to include any "telephonic electronics, or radio communication . . .between 2 or more persons regardless of whether one or more of the parties intended their communication [to be private]."[23] Also before the amendment the bill modified the definition of eavesdropping in section 14-2 to define the offense as:

> A person commits eavesdropping when he: (a) Uses an eavesdropping device or facilitates the use of an eavesdropping device by manufacturing or possessing an eavesdropping device knowing that the eavesdropping device will be used to observe, hear, or record all or any part of any conversation unless he does so (1) with the consent of all of the parties to such conversation . . .[24]

Comparing this version of section 14-2 to the enacted version, it appears the intent language Representative Fritchey mentioned was the "knowingly and intentionally uses an eavesdropping device" language currently in section 14-2. Further, the pre-amendment bill defined eavesdropping device as

The DCBA BRIEF is the Journal of the DuPage County Bar Association ("DCBA"). Unless otherwise stated, all content herein is the property of the DCBA and may not be reprinted in whole or in part without the express written permission of the DCBA. © 2006 DCBA. Opinions and positions expressed in articles appearing in the DCBA BRIEF are those of the author(s) and not necessarily those of the DCBA or any of its members. Neither the author(s) nor the publisher is engaged, in this publication, in rendering legal or other professional advice and this publication is not a substitute for the advice of an attorney. If you require legal or other expert advice, you should seek the services of a competent attorney or other professional. PUBLICATION GUIDELINES: All submitted materials must state the author's surname and be signed by the author to be considered for publication. All submitted materials are subject to acceptance and editing by the Editorial Board of the DCBA BRIEF. Material submitted to the DCBA Brief for possible publication must confirm with the DCBA Brief's Writers Guidelines (which are available at www. dcbabrief.org). ADVERTISING AND PROMOTION: Reprinted articles in the DCBA BRIEF's format (with ads removed) are available for purchase. All advertising is subject to approval. Approval and acceptance of an advertisement does not constitute an endorsement or representation of any kind by the DCBA or any of its members as to the advertiser or the advertisement.

CONTACT INFORMATION: All articles, comments, criticisms, and suggestions should be directed to Ted Donner, Editor, Donner & Company Law Offices LLC, 1125 Wheaton Oaks Ct., Wheaton, IL 60187 Phone (630) 588-1131 Fax (630) 682-1131, Email: tdonner@donnerco.com or email@dcbabrief.org. Please send change of address notices and any subscription inquiries to: Glenda Berg Sharp, Executive Director, DuPage County Bar Association, 126 South County Farm Road, Wheaton, IL 60187. Visit the DCBA Brief Online: www.dcbabrief.org.

only those devices capable of "being used to hear or record oral conversation." This seems to conflict with the definition of "conversation," in which it appears the drafters attempted to cover non-oral electronic communication. Regardless, the pre-amendment bill did not apply to Internet chat conversations because the bill prohibited only the use of "eavesdropping devices" capable to being used to hear or record oral conversations.

The meaning of Representative Fritchey's statement is not clear, but what is clear is the language of the present definition of "electronic communication," which was added by SA3 and requires that the "sending and receiving parties intend the electronic communication to be private." If there is no "electronic communication" because one party did not intend the communication be private then there is no need to consider the rest of section 14-2(a) that provides an exception for activities that are done "with the consent of all of the parties to such conversation or electronic communication." If the legislature intended to cover Internet chat conversations between undercover police and unsuspecting parties then it could have easily provided a definition of "electronic communication" that required only one person to intend the conversation be private.

Expectation of Privacy with Internet Messages. An expectation of privacy, as protected by the Fourth Amendment, exists where (1) a person, by conduct, exhibits a subjective actual expectation of privacy and (2) that expectation "is one that society is prepared to recognize as reasonable."[25] The U.S. Supreme Court has stated there is no Fourth Amendment protection for "a wrongdoer's misplaced belief that a person to whom he voluntarily confides his wrongdoing will not reveal it."[26] In *Hoffa v. United States*,[27] the Court held the defendant had no Fourth Amendment protection in a conversation heard by invited government informant. The Court stated, "The risk of being . . . betrayed by an informer or deceived as to the identity of one with whom one deals is probably inherent in the conditions of human society. It is the kind of risk we necessarily assume whenever we speak."[28]

"It is not whether the substance of the communication is dishonest, but whether the recording or transcription was done secretively."

In *United States v. Maxwell*,[29] the U.S. Court of Appeals for the Armed Forces relied on *Hoffa*, when it ruled a defendant lost any expectation of privacy in his e-mail once it was sent. Comparing email to postal mail, the court found the e-mail sender had a reasonable expectation the message would not be intercepted by the police without a warrant, but once the message was received by the intended recipient, "the transmitter no longer control[ed] its destiny."[30] The court stated, "Messages sent to the public at large in the 'chat room' or e-mail that is 'forwarded' from correspondent to correspondent lose any semblance of privacy."[31]

In *United States v. Charbonneau*,[32] the United States District Court relied on *Maxwell* and *Hoffa*, when it refused to suppress statements the defendant made in an America Online chat room where undercover FBI agents were present. Similarly, in *Commonwealth v. Proetto*,[33] a Pennsylvania court held there was no constitutional violation for the admission into evidence of chat-room conversations between the defendant and an undercover officer posing as a fifteen-year-old girl. The court also found no constitutional violation for the admission of chat-room transcripts and e-mails between the defendant and a minor, where the minor later voluntarily turned those documents over to police.[34]

Unlike oral communications under the Illinois eavesdropping statute, a communication qualifies as an electronic communication only when **both** parties intend the communication to be private. The legislature demonstrated, by overruling *Beardsley*, an intent to require all parties to consent to the recording of oral conversations. But, it has not imposed that requirement on electronic communications as evidenced by the statutory definition of electronic communication.

In *Beardsley*, the Illinois Supreme Court relied on the U.S. Supreme Court's Fourth Amendment based decision in *Lopez v. United States*.[35] Although the Illinois legislature overruled *Beardsley*, this reliance indicates the privacy interest expressed in the eavesdropping statute should be evaluated by the same standards as those defined by the U.S. Supreme Court under the Fourth Amendment.

In the case where an undercover police officer participates in a chat with the defendant, it is clear the communication does not qualify as an electronic communication under the statute because the officer does not have a subjective expectation of privacy in the conversation. In the case where the defendant is chatting with an actual minor who later reveals the chat conversation to the police, *Maxwell, Charbonneau,* and *Proetto* indicate the sender cannot have a reasonable expectation of privacy in the messages once they

are received by the intended recipient. The eavesdropping statute creates a protectable privacy interest in oral conversations even with respect to recording by parties to the conversation, but the same cannot be said for Internet communications because the very nature of the communication requires it to be recorded as is explained below.

Recording in a Surreptitious Manner? In addition to the requirement that both parties intend the communication be private, the recording, interception or transcription must be done in a "surreptitious manner" to qualify as an electronic communication.[36] Webster's Online dictionary defines surreptitious as "(1) done, made, or acquired by stealth, (2) acting or doing something clandestinely."[37] A federal appeals court described the process of sending an e-mail in this way:

> After a user composes a message in an e-mail client program, a program called a mail transfer agent ("MTA") formats that message and sends it to another program that "packetizes" it and sends the packets out to the Internet. Computers on the network then pass the packets from one to another; each computer along the route *stores the packets in memory*, retrieves the addresses of their final destinations, and then determines where to send them next. At various points the packets are reassembled to form the original e-mail message, *copied*, and then repacketized for the next leg of the journey.[38]

The *Proetto* court stated with respect to e-mail and chat communications:

> The sender knows that by the nature of sending the communication a record of the communication, including the substance of the communication, is made and can be downloaded printed, saved, or in some cases, if not deleted by the receiver, will remain on the receiver's system.[39]

The *Proetto* court also noted a person in a telephone conversation has no reason to believe the conversation is being recorded, but "Any reasonably intelligent person, savvy enough to be using the Internet . . . would be aware of the fact that messages are received in a recorded format, by their very nature, and can be downloaded or printed by the party receiving the message."[40]

An e-mail, instant message, or chat room conversation, saved by a participant to the conversation or an occupant of the chat room, does not qualify as an electronic communication under the Illinois eavesdropping statute because the user knows or reasonably should know their internet messages are necessarily recorded, at least temporarily. When a user knows their messages are being recorded by the very nature of the Internet

communication, that recording cannot be considered surreptitious. Setting aside the privacy issue, to find receiving an email, instant message, or Internet chat room message is a surreptitious recording would lead to the absurd result that every Internet message received constitutes eavesdropping.

In *People v. Gariano*, Justice Neville argued the officer there intercepted or transcribed the internet chat conversations in a "surreptitious manner" because: (1) the officer was online in his official undercover capacity, (2) the officer posed as a 15-year-old boy, (3) the officer transmitted a digital picture, purporting to be of him, but was of another police officer who was much younger, and (4) the officer denied being a policeman.[41] However, the definition of electronic communication requires "the interception, recording, or transcription of the electronic communication [be] accomplished by a device in a surreptitious manner."[42] Therefore, it is not whether the substance of the communication is dishonest, but whether the recording or transcription was done secretively. The factors noted by Justice Neville go to the dishonesty of the substance of the officer's communication, but do not address whether the recording and transcription was done secretively. The very nature of Internet communications requires them to be recorded and transmitted.

The fact that the officer in *Gariano* installed particular tools that recorded and transcribed the AOL chat conversations does not make the recording surreptitious because many chat programs now automatically record the conversations without giving explicit notice to the other communicating user. In fact, the promotional material for the present version 6.1 of AOL Instant Messenger (AIM) provides, "AIM 6.1 lets you save your IM conversations on your computer. Now you'll never have to worry about remembering what one of your friends said to you."[43] Also, another internet chat program "Google Talk" provides, "When you use Google Talk, you can save your chat histories in your Gmail account for searching and accessing later. This feature is on by default . . . ."[44] Google Talk allows you to go " 'off the record' if you don't want a particular chat, or chats with a specific person, to be automatically saved in either person's Gmail account."[45] However, going off the record does not prevent "the person you're chatting with from manually saving your chats, such as by cutting and pasting."[46]

Implied Consent. The Illinois Supreme Court, in *People v. Ceja*,[47] recognized the eavesdropping statute does not apply when the aggrieved party impliedly consented to the recording. The court noted consent under the eavesdropping statute is not measured by the rigorous standard of informed consent required for a defendant to waive a Fourth Amendment right.[48] The court found "Consent exists where a person's behavior manifests acquiescence or a comparable voluntary diminution of his or her otherwise protected rights."[49] The court defined implied consent as "consent in fact, which is inferred from the surrounding circumstances indicating that the party knowingly agreed to the surveillance."[50] In *Ceja*, the defendant made incriminating statements in jail, which were recorded by a jail's monitoring system. The court found the defendant impliedly consented to the recording of his conversation because the monitoring system made a loud pinging noise when recording and he knew his conversation was being overhead.[51]

The *Proetto* court found "by the act of forwarding an e-mail or communication via the Internet, the sender expressly consents by conduct to the recording of the message."[52] The court analogized Internet communications to leaving a message on a telephone answering machine.[53] The court noted with respect to answering machines, "we cannot imagine how one could not know and [not] intend that a message placed upon the answering machine tape *be taped, and by the very act of leaving a message, expressly consented by conduct to the taping of that message*."[54]

Illinois courts have not addressed the issue of whether the sending of an Internet message constitutes implied consent to the recording of that message, but the reasoning of *Proetto* is persuasive. As noted above, the very act of sending any Internet communication requires the recording and copying of the message so it can be transmitted to the designated recipient. The sender of an Internet communication likely gives implied consent to recording of the message by the intended recipients. Persons considered an "intended recipient" include any person present in an Internet chat room when the message is transmitted because the sender knows all persons present in the room at the time will receive the message.

Conclusion. The recording of the Internet chat conversation between a defendant and a police officer is not an "electronic communication" under the statute because the officer does not intend the communication to be private. In the case where the chat conversation

ALL DUPAGE JUDGES, ATTORNEYS AND THEIR SPOUSES ARE INVITED TO ATTEND THE FOURTH ANNUAL RED MASS AND BRUNCH

SPONSORED BY THE ST. THOMAS MORE SOCIETY OF DUPAGE COUNTY

Date: Sunday, October 28, 2007, 12:00pm (Optional brunch to follow)
Location: St. Michael Church, 315 W. Illinois, Wheaton, IL. Bishop J. Peter Sartain will preside. (There is no award speaker at the brunch this year.)

WHAT IS THE RED MASS?

The Red Mass is a traditional ceremony with a long and rich history. It dates to the Thirteenth Century when it officially opened the court term in most European countries.

The Red Mass is attended by judges, lawyers, and politicians of **all faiths**. We gather to ask God to bless, strengthen and enlighten all civic and religious leaders, servants of the law, and people of faith, so that in cooperation and mutual trust, we may more effectively achieve a just and free society. Members of the legal profession from all denominations traditionally attend the Red Mass. The Mass invokes the help of the Holy Spirit of God as the source of wisdom, understanding, counsel and fortitude, gifts that must shine forth preeminently in the dispensing of justice in the courtroom and in the individual lawyer's practice.

This tradition was introduced into the United States in 1928 at the Church of St. Andrew, in New York City. Cardinal Patrick Hayes presided, and strongly encouraged the involvement of the legal community in spreading God's message and bringing about a civic order of justice and harmony. The celebrants process into the church clothed in red vestments, together with politicians, lawyers and judges, signifying the fire of God's spiritual guidance to all who pursue justice in their daily lives.
Agenda: All are asked to please wear something red (dress, tie, etc.) to the service. Judges are asked to bring their robes. Attorneys and judges will initially find a seat in the reserved section of the church and will later line up (judges in their robes)and process into the church to start the service. At the conclusion of the service , a Justice of the Illinois Appellate Court will re-administer the Illinois oath of office to all attorneys present. All will then process out of the church ,and those going to the brunch will go into the Parish Center immediately in back of the church. A full brunch catered by Sharko's Restaurant will be served.

Cost: The Red Mass is free. Tickets for the brunch are $30 per person, or tables of 8 for $230 . Tickets must be purchased in advance, and will NOT be sold on the day of the event. Please mail ticket orders with a check in the proper amount made out to: **The St. Thomas More Society, 26W158 Mayflower Place, Wheaton, IL 60187.** Brunch seating is limited so please order now**.** For further information, please call Eddie Wollenberg at 668-2415

is saved by a minor and later related to the police, a reasonable argument can be made the defendant did not have a reasonable expectation of privacy vis-a-vis the intended recipient, because he assumed the risk that the person he was communicating with was a police officer or could reveal what he said to the police. Also, in either case, the recording was not done in a surreptitious manner because the defendant knew or reasonably should have known the conversation must be "recorded" as a necessary function of Internet communication. Last, the de-fendant could be seen to impliedly consent to the recording of the chat conversation by the intended recipient, again because of the nature of Internet communications. ■

[2] Helen Gunnarsson, *No Police "Eavesdropping" on Sexual Predators – Even in Cyberspace?* 92 ILL.B.J. 238 (2004).
[3] 366 Ill.App.3d 379 (Ill.App. 1st Dist. 2006).
[4] 720 ILCS 5/14-2(a) (West 2004) (emphasis added).
[5] *Id.* at 14-1(d).
[6] *Id.* at 14-4, 14-5.
[7] 155 Ill.2d 47, 49 (Ill. 1986).
[8] *Id.* at 56.
[9] *Id.*
[10] *Id.* at 58.
[11] 720 ILCS 5/14-1(d) (West 2004); P.A. 88-677, § 20 (eff. Dec. 15, 1994).
[12] *People v. Nestrock*, 316 Ill.App.3d 1, 12 (Ill.App. 2nd Dist. 2000).
[13] P.A. 91-657, § 5, eff. Jan. 1, 2000.
[14] 720 ILCS 5/14-1(e) (West 2004) (emphasis added).
[15] The Federal Communication Commission describes cell phone cloning fraud as follows:
"Every cell phone is supposed to have a unique factory-set electronic serial number (ESN) and telephone number (MIN). A cloned cell phone is one that has been reprogrammed to transmit the ESN and MIN belonging to another (legitimate) cell phone. Unscrupulous people can obtain valid ESN/MIN combinations by illegally monitoring the radio wave transmissions from the cell phones of legitimate subscribers. After cloning, both the legitimate and the fraudulent cell phones have the same ESN/MIN combination and cellular systems cannot distinguish the cloned cell phone from the legitimate one." FCC Consumer Advisory: Cell Phone Fraud *at* http:/www.fcc.gov/cgb/consumerfacts/cellphonefraud.html (last visited 4/11/06).
[16] 91st Ill.Gen. Assem., S. Trans. May 14, 1999 at 19.
[17] 366 Ill.App.3d at 382.
[18] *Id.*
[19] *Id.* at 381.
[20] *Id.* at 386.
[21] *Id.* at 391 (Neville, J., dissenting).
[22] *Id.* citing (91st Ill. Gen. Assem., House Proceedings, May 19, 1999, at 21 (statements of Representative Fritchey)).
[23] 91st Ill. Gen. Assem., House Bill 526 as Introduced.
[24] *Id.*
[25] *Katz v. United States*, 389 U.S. 347, 361 (1967) (Harlan, J., concurring).
[26] *Hoffa v. United States,* 385 U.S. 293, 302 (1966).
[27] *Id.*
[28] *Id.* at 303 (quoting *Lopez v. United States*, 373 U.S. 427, 465 (1963) (Brennan, J., dissenting)).

Continued on page 48

Free hands-on Westlaw & FindLaw Training!

West Training Center

at the DuPage County Bar Association
October/November calendar

Friday, October 5
8:30am Westlaw Paralegal Certificate Program 1
9:45am Westlaw Paralegal Certificate Program 2
11:00am Westlaw Paralegal Certificate Program 3

Friday, October 12
8:30am Westlaw Fundamentals-1 IL MCLE credit
9:45am Intermediate Westlaw-1 IL MCLE credit
11:00am Advanced Westlaw-1 IL MCLE credit

Friday, November 2
8:30am Westlaw Fundamentals-1 IL MCLE credit
9:45am Intermediate Westlaw-1 IL MCLE credit
11:30-12:45am Lunch & Learn: Litigation Seminar-1 IL MCLE credit

Friday, November 9
8:30am Westlaw Paralegal Certificate Program Part 1
9:45am Westlaw Paralegal Certificate Program Part 2
11:00am Westlaw Paralegal Certificate Program Part 3

Classes will be held at:

West Training Center at the
DuPage County Bar Association
126 S. County Farm Road
Wheaton, IL

Please arrive 10 minutes early to ensure that your class begins on time.

Register online at
west.thomson.com/westlaw/training/classes
or call 800-323-8067

THOMSON WEST

NORTHERN EXPOSURE

Commandeering Generic Slang: A "Hogwash" Decision Upholding Trademark Protection for Harley Davidson

in H-D Michigan, Inc. v. Top Quality Service, Inc. Case Note

by Jeffrey R. Hanes

Introduction. If it has not already, intellectual property is becoming one of the biggest buzzwords in both the business and legal fields. Included within the realm of intellectual property law are trademarks, copyrights, and patents. Trademarks are important because they play an integral role in a company's ability to generate capital by serving a symbolic, expressive function that translates into market value.[1] And although the importance of trademarks in today's business world cannot be overemphasized, there must still be some boundaries as to what degree society is willing to afford protection to these marks. Questions frequently arise as to what extent a company should be allowed to protect and exercise the rights it is afforded by registering a mark.[2] Debate is further fueled by the well-known potential abuses of those possessing such rights.[3] Even during the many hearings over enactment of the 1946 Trademark Act representatives of the Department of Justice recognized this and raised objections on numerous occasions, asserting that trademarks are monopolistic and that statutory recognition and protection of trademarks favor big business.[4]

"This underlying policy to protect society rather than the author, through consumer protection, is distinct from the other areas of intellectual property law."

There is no doubt that a company should, and does, reserve the right to preclude another from trading on its good name, but a line exists at some point separating those expressions that are protectable from those that are not. This article examines the decision of the Seventh Circuit Court of Appeals in *H-D Michigan, Inc. v. Top Quality Service, Inc.*, where it made such a determination.[5] By holding that Harley Davidson may protect the mark "Hog" under the facts arising in the case, this article argues that the Seventh Circuit has given holders of trademark rights far beyond those intended to the point where the court allowed Harley Davidson to protect a word that is essentially generic slang.

Trademark Law. As defined within the United States Code, the term "trademark" refers to any word, name, symbol, device, or any combination thereof that is used by a person to identify and distinguish his or her goods from those manufactured or sold by others, and to indicate the source of the goods, even if that source is unknown.[6] Originally it served to provide the origin or ownership of the article to which it was affixed.[7] Like patent and copyright, trademark helped to protect the rights of the holder. However, as time went on and licensing and franchising became a popular means of allowing others to borrow or trade on a company's goodwill, its function became more of an indicator or guarantee of quality for consumers.[8] This underlying policy to protect society rather than the author, through consumer protection, is distinct from the other areas of intellectual property law. Regulating the marks a company may use protects against consumer confusion as to the source, sponsorship, or approval of goods or services or commercial activities of another.[9] Trademark law

Jeffrey R. Hanes *is a third-year law student at Northern Illinois University College of Law. He is a Lead Articles Editor of the Law Review and member of the Moot Court Society. He graduated in 2005 from the University of Wisconsin-Madison with a B.S. in Biology; J.D. expected May 2008.*

DuPage County Bar Asssociation
&
The Child Advocacy Committee
Present

Guardian Ad Litem Training for Adoptions

Saturday, October 20
9:00 am - Noon

DCBA

126 S. County Farm Rd.
Wheaton, Illinois 60187

Want to be appointed as a guardian ad litem in adoption cases?
Do you want to simply learn more about adoptions?
This training will provide you with the tools you need to serve as GA minor children in adoption proceedings. After this training you may apply to be on the approved Adoption GAL list in the Chancery Division. Sign up today. 21/2 hours MCLE credit is available.

9:00 - 9:30 a.m. **Registration**

9:30 - 10:15 a.m. **Overview of the Illinois Adoption Act: Considerations for GAL's**
Kathleen Hogan Morrison, Esq.
Law Office of Kathleen Hogan Morrison

10:15 - 10:35 a.m. **Interviews and Investigations as the GAL**
Laura M. Urbik Kern, Esq.
Law Offices of Laura M. Urbik Kern, L.L.C.

10:35 - 10:55 a.m. **Writing the GAL Report**
Bruce Garner, Esq.
Schirott & Luetkehans

10:55 - 11:15 a.m. **Attorney Expectations of the GAL**
Fred Spitzzeri, Esq.
Law Office of Alfred A. Spitzzeri

11:15 - 11:50 a.m. **Contest Adoptions and the Role of the GAL**
Debra J. Braseleton, Esq.
Law Firm of Debra J. Braselton, P.C.

11:50 - Noon **Q & A**

DCBA Member Rate: $50.00 (Add $10.00 for late registration)
Non-Member Rate: $60.00 (Add $10.00 for late registration)
New Lawyer Rate: $30.00 (Add $10.00 for late registration)

Name:_____ Phone: _____

Address:_____

Amount:$_____ Check No._____ ARDC#:_____(required for MCLE)

Credit Card #_____Exp Date:_____

Signature for Charge:_____

Note: Early Bird fee may be taken for paid registrations **received** by the Bar Office **at least 1 week prior to seminar.** "Walk Ins" and those registering within one week of the event pay the regular rate. **We cannot guarantee handouts or lunches for walk-ins at the seminar.** Registered attendees will be given preference.

typically works to benefit both parties because consumer protection generally aligns with a company's interest in preventing confusion about its product.[10]

For a mark to be eligible to receive protection under trademark status, it must be a signal to the consuming public about the product and source.[11] Requirements for a word or symbol to qualify as a trademark are broken down into three essential elements: (1) it must be a word, name, symbol or device, or any combination of these; (2) the manufacturer or seller of goods or services must have actual adoption and use of the symbol as a mark; and (3) the mark must serve the function of identifying and distinguishing the seller's goods from goods made or sold by others.[12] Once the holder of mark is able to prove these three elements, it will be able to receive full protection under trademark law.

However, protection will not be afforded where the mark sought as a trademark is merely descriptive—that is, a trademark that identifies the product and not the source.[13] In this way, trademark law can guard against unjustified appropriation from the public domain of terms needed to perform descriptive functions.[14] And whereas a descriptive mark may become protectable if it acquires a secondary meaning, meaning that the product name has become uniquely associated with the original seller, a generic term will not receive trademark protection even if it acquires a secondary meaning.[15] A generic term simply states what the product is and serves to denote a type, a kind, a genus or a subcategory of goods.[16] To determine whether a mark is generic, courts apply the Ginn Test, which looks at (1) the genus of the goods and (2) whether it is understood by the relevant public primarily to refer to that genus of goods or service.[17] In this sense, a company's name may be generic as to one of its products but not another, even though related.

Companies wishing to protect a trademark against use by another may file a claim pursuant to the Lanham Act, which has been codified at 15 U.S.C. § 1125(a). To succeed on a claim for trademark infringement, the company must show that (1) it is a trademark that may be protected and (2) the relevant group of buyers is likely to confuse the alleged infringer's products or services with their own.[18] Likelihood of confusion as used by the courts is actually a multi-factor balancing test. The courts look to, but are not limited by, what are known as the Polaroid factors.[19] These factors include the strength of the mark, degree of similarity of the marks, proximity of the products, bridging the gap, actual confusion, junior user's good faith in adopting the mark, quality of the respective goods, and sophistication of the relevant buyers.[20] Polaroid factors only come into consideration after the court deems the mark to be one that is protectable.

Facts. The case currently at issue, *H-D Michigan, Inc. v. Top Quality Service, Inc.*, arose over Top Quality Service, Inc.'s (Top Quality) use of the name "Hogs on the High Seas."[21] Top Quality was using the name to advertise ocean cruises for motorcyclist enthusiasts. H-D Michigan, Inc. and Harley Davidson Motor Co., Inc. (collectively Harley) sued alleging trademark infringement, false designation of origin, and unfair competition under the Lanham Act and state law of its two trademarks, HOG and H.O.G., which it uses for its motorcyclist travel club, the Harley Owners Group.[22] The case came to the Seventh Circuit Court of Appeals after the district court granted summary judgment in Top Quality's favor, concluding Harley was collaterally estopped by a Second Circuit decision, *Harley-Davidson, Inc. v. Grottanelli*, from bringing trademark claims premised on use of the word hog to refer to motorcycle products or services.[23]

Evidence was brought at trial that some of Top Quality's potential customers were confused as to whether the Harley Owners Group sponsored the cruises. Also at trial was evidence that Top Quality took steps to limit this confusion through posting statements on its website and printing statements on its literatures disclaiming association with Harley and the Harley Owners Group. Both of these facts were important because they became relevant in the balancing test used to decide whether there was a likelihood of confusion for consumers if the mark was protectable. The court concluded that *Grottanelli* was not controlling because it never decided whether Grottanelli's use of the word "hog" was generic and therefore did not apply. The holding was that the mark "Hog" was protectable under the current facts, and there was a likelihood of confusion because of the evidence offered of actual confusion.[24] As a result of this analysis, the Seventh Circuit reversed the district court's ruling that granted summary judgment in Top Quality's favor and essentially gave Harley free reign to protect its mark in any similar matter.

Analysis. There can be no doubt that actual confusion existed among consumers over use of the mark "Hog." Courts ordinarily find

evidence of actual confusion sufficient to create a genuine issue of material fact on the issue of likelihood of confusion.[25] If this were all that was needed to prove a trademark infringement case, I would agree with the current outcome as held by the majority. However, a mark must first be protectable before a court should even address the issue of likelihood of confusion. Under the facts of this case, I believe the mark "Hogs," as used by Top Quality, is a generic mark and therefore not protectable by Harley.

In *Grottanelli*, the court looked back at public use of the word hog. It found that, in the late 1960s and early 1970s, motorcycle enthusiasts used the word "hog" to refer to motorcycles generally and to large motorcycles in particular—over a decade before Harley's first attempt to make trademark use of the term.[26] Looking at this use of the word, it seems clear that "hog" was understood by the relevant public primarily to refer to that genus of goods, therefore making it generic as applied to motorcycles. In fact, as the word hog increasingly gained use in reference to Harley-Davidson motorcycles, Harley went out of its way to try and disassociate itself from the word.[27] It was not until Harley's new owners recognized the financial value behind that mark that Harley began using the term in connection with its merchandise, accessories, advertising and promotions, and formed the Harley Owners' Group (H.O.G.).[28] It often happens that a trademark holder, after investing considerable sums of money to develop and protect its mark, must fight to keep its mark from being deemed generic and thus falling into the public domain.[29] Here Harley did the opposite, it spent considerable sums of money to develop and protect a mark that it wished to pull out of the public domain.

Harley may only prevent another's use of a mark that is protectable in the first place. Prior to Harley's first attempt to trademark "Hog," the term was already included in several dictionaries defining it as a motorcycle, especially a large motorcycle.[30] Once deemed to be generic, a word cannot be withdrawn from the public domain. Harley was free to trademark the term "Hog" but only as it applied to a motorcycle enthusiast club, other uses of the word would remain in the public domain. Top Quality can hardly be said to be making reference to motorcycle clubs, therefore use of "Hogs on the High Seas" should not be precluded because of Harley's trademark in either "HOG" or "H.O.G." Harley cannot commandeer generic slang and claim it as its own.[31] Allowing it to do so is decision heavily against the weight of the precedent set by *Grottanelli* and other cases addressing the same issue.

Manufacturers may not take a word, or even a slang term, out of the public domain that has a generic meaning as to a category of products and appropriate it for its own trademark use.[32] For this reason the court in *Grottanelli* concluded, "Harley-Davidson may not prohibit Grottanelli from using hog to identify his motorcycle products and services."[33] As a result Grottanelli was not prohibited from sponsoring an event known as "Hog Holidays." Harley could only protect its mark as applied to motorcycle clubs. This language taken directly out of the opinion of the *Grottanelli* court contradicts the majority's opinion in the current case, that the *Grottanelli* opinion never stated hog was "generic as applied to a motorcyclist club or to motorcycle products or services."[34] Denying collateral estoppel based on this argument is basing it on an incorrect premise. I agree with the dissent of Judge Evans, who finds *Grottanelli* clearly applicable to motorcycles as well as motorcycle products and services.[35] It would be hard to argue that in advertising "Hogs on the High Seas," Top Quality was referring to a club for motorcycle enthusiasts. A cruise is much more accurately described as a product or service than a club, and the use of "Hogs" in their advertisement seems to simply refer to motorcycles (even though no patrons were allowed to bring motorcycles aboard the ship). Even Harley recognized making a distinction between "Hog Holidays" and "Hogs on the High Seas" is a difficult one.[36] Since Top Quality's use parallels that of the use in *Grottanelli* and it does not refer to a motorcycle club, Harley should be precluded from protecting against use the mark by Top Quality in this instance.

Conclusion. Trademark law is a useful tool in helping a company protect its good will and in protecting the consuming public. At the same time, trademark law also has limits set by previous cases establishing to what extent a company many protect a mark and what marks may be protected. The Seventh Circuit Court of Appeals, in *H-D Michigan, Inc. v. Top Quality Service, Inc.*, went beyond those established means when it allowed Harley to preclude Top Quality's use of "Hogs."[37] Both the majority and dissenting opinions agreed that *Grottanelli* was a controlling case, but the majority neglected the actual language of the case that made it applicable to motorcycle products and services.[38] Reading the *Grottanelli* case correctly, as the dissent suggests, precludes Harley

from preventing Top Quality's use of the word. Additionally, the word "hog" was deemed generic far before Harley's attempt to use it as a mark.[39] Harley even went as far as trying to disassociate itself from the mark. It sets a bad precedent and interprets the prior case law incorrectly to allow Harley to seize a term out of the public domain and assert it as its own. For these reasons the Seventh Circuit held incorrectly when it reversed the holding of the lower court; we should "brand that attempt as hogwash."[40]■

[1] Deven R. Desai & Sandra L. Rierson, *Confronting the Genericism Conundrum*, 28 CARDOZO L. REV. 1789, 1794-96 (2007) (Trademarks translate into market value because brands may become "symbols by which people define and express themselves," causing them to spend "far beyond the cost of the utility of the good to reinforce that identity or have that means of expression").

[2] *See* Alex Kozinski, *Trademarks Unplugged*, 68 N.Y.U. L. REV. 960, 962-63 (1993) ("[w]here trademarks once served only to tell the consumer who made the product, they now often enhance it or become a functional part of it... [raising] questions about whether-and to what extent-the law should protect trademarks when they are pressed into service as separate products").

[3] *See e.g.* Juno Online Services v. Juno Lighting, Inc., 979 F.Supp. 684 (N.D. Ill. 1997) (Juno Lighting, the owner of the Juno mark, attempted to cancel the domain name juno.com, which was registered by Juno Online to provide free e-mail services, and register the domain juno-lighting.com for itself).

[4] J. Thomas McCarthy, McCarthy on Trademarks & Unfair Competition § 5:4 (4th ed. 2007).

[5] H-D Michigan, Inc. v. Top Quality Service, Inc., No. 06-3618, — F.3d ——, 2007 WL 2200477 (7th Cir. Aug. 2, 2007) (Harley Davidson initiated this suit for trademark infringement against Top Quality Service for its use of the name "Hogs on the High Seas," which it claimed infringed on its two trademarks Hog and H.O.G. that Harley uses for its motorcyclist travel club, the Harley Owners Group).

[6] 15 U.S.C. § 1127 ("trademark" may also refer to any word, name, symbol, or device not currently in use but that a person has applied to register with a bona fide intention to use).

[7] Hanover Star Milling Co. v. Metcalf, 240 U.S. 403, 412 (1916).

[8] Raveen Obhrai, *Traditional and Contemporary Functions of Trademarks*, 12 J. CONTEMP. LEGAL ISSUES 16, 17 (2001) (The trademark represents a consistent level of quality, whatever that level may be).

[9] William E. Ridgway, *Revitalizing the Doctrine of Trademark Misuse*, 21 BERKELEY TECH. L.J. 1547, 1557-58 (2006) (this saves the consumer time because he or she may rely on the distinctive marks as proxies for quality of the goods and services desired without undertaking independent research and investigation each time).

[10] William E. Ridgway, *Revitalizing the Doctrine of Trademark Misuse*, 21 BERKELEY TECH. L.J. 1547, 1548 (2006). A resulting byproduct of these two interests is an increase in the production quality of goods and services. *Id.* at 1558.

[11] *See* MicroStrategy Inc. v. Motorola, Inc., 245 F.3d 335 (4th Cir. 2001) (mark must be a legitimate signal to be protectable as a trademark).

[12] *See* Qualitex Co. v. Jacobson Products Co., Inc., 514 U.S. 159 (1995).

[13] *See* G. Heileman Brewing Co., Inc. v. Anheuser-Busch, Inc., 873 F.2d 985 (7th Cir. 1989) (the mark "LA" was not protectable because its merely described the beer as low-alcohol beer).

[14] *Id.* at 994 (citing Gimix, Inc. v. JS & A Group, Inc., 699 F.2d 901, 907 (7th Cir. 1983)).

[15] *See* Custom Vehicles, Inc. v. Forest River, Inc., 476 F.3d 481 (7th Cir. 2007).

[16] *See* G. Heileman Brewing Co., Inc. v. Anheuser-Busch, Inc., 873 F.2d 985 (7th Cir. 1989) ("LA" was found to be generic because it referred only to the type of beer).

[17] H. Marvin Ginn Corp. v. International Ass'n of Fire Chiefs, Inc., 782 F.2d 987 (Fed. Cir. 1986).

[18] Forum Corp. of North America v. Forum, Ltd., 903 F.2d 434, 439 (7th Cir. 1990).

[19] *See* Polaroid Corp. v. Polarad Elecs. Corp., 287 F.2d 492 (2d Cir. 1961) (the court listed factors relevant in analyzing the likelihood of confusion in trademark violation cases, giving more deference to some than others).

[20] *Id.*

[21] H-D Michigan, Inc. v. Top Quality Service, Inc., No. 06-3618, — F.3d ——, 2007 WL 2200477, at *1 (7th Cir. Aug. 2, 2007).

[22] *Id.* (Harley filed an opposition proceeding in response to Top Quality's application to register "Hogs on the High Seas in connection with travel arrangements in the nature of cruises for motorcycle owners and enthusiasts).

[23] *Id.* at *2 (citing Harley-Davidson, Inc. v. Grottanelli, 164 F.3d 806 (2d Cir. 1999)).

[24] Id. at *6 (The court found that *Grottanelli* only held "Hog" was generic as applied to large motorcycles and did not resolve the issue as applied to a motorcyclist club. It also found that the term "Hog" was generic as applied to motorcycles not and not in reference to the Harley Owners Group since it is not a commonly used name for a motorcyclist club. Furthermore, the court held Top Quality's use was not generic because it was referring to motorcyclists traveling on the ocean and not motorcycles.)

[25] *See* Thane Intern., Inc. v. Trek Bicycle Corp., 305 F.3d 894, 902 (9th Cir. 2002) (evidence produced at trial of actual confusion constitutes persuasive proof that future confusion is likely to occur).

[26] Harley-Davidson, Inc. v. Grottanelli, 164 F.3d 806, 808 (2d Cir. 1999).

[27] *Id.* at 809 (Harley-Davidson's Manager of Trademark Enforcement acknowledged this attempt).

[28] Deven R. Desai & Sandra L. Rierson, *Confronting the Genericism Conundrum*, 28 CARDOZO L. REV. 1789, 1790 (2007) (a company's marketing goal is usually to build brand dominance to the point of ubiquity, so that the brand is the first thing on a consumer's mind when considering a purchase of a particular type of good).

[29] H-D Michigan, Inc. v. Top Quality Service, Inc., No. 06-3618, — F.3d ——, 2007 WL 2200477, at *6 (7th Cir. Aug. 2, 2007) (Evans, J., dissenting) (the opinion did not discuss motorcycle clubs).

[30] *Grottanelli*, 164 F.3d at 808 (citing THE OXFORD DICTIONARY OF MODERN SLANG (1992)).

[31] H-D Michigan, Inc. v. Top Quality Service, Inc., No. 06-3618, — F.3d ——, 2007 WL 2200477, at *7 (7th Cir. Aug. 2, 2007) (Evans, J., dissenting).

[32] *Grottanelli*, 164 F.3d at 810 (citing Abercrombie & Fitch Co. v. Hunting World, Inc. 537 F.2d 4, 9 (2d Cir. 1976).

[33] *Id.* at 812.

[34] H-D Michigan, Inc. v. Top Quality Service, Inc., No. 06-3618, — F.3d ——, 2007 WL 2200477, at *4 (7th Cir. Aug. 2, 2007).

[35] *Id.* at *6.

[36] *Id.* at *7.

[37] *See Id.*

[38] *See Grottanelli*, 164 F.3d at 810.

[39] *See* THE OXFORD DICTIONARY OF MODERN SLANG (1992)).

[40] H-D Michigan, Inc. v. Top Quality Service, Inc., No. 06-3618, — F.3d ——, 2007 WL 2200477, at *7 (7th Cir. Aug. 2, 2007) (Evans, J., dissenting).

EAVESDROPPING
Continued from page 40

[29] 45 M.J. 406, 418 (C.A.A.F. 1996).
[30] *Id.*
[31] *Id.* at 419.
[32] 979 F.Supp. 1177, 1185 (S.D.Ohio 1997).
[33] 771 A.2d 823, 832 (Pa. Super. Ct. 2001).
[34] *Id.*
[35] *Lopez v. United States*, 373 U.S. 427 (1967).
[36] 720 ILCS 5/14-1(e) (West 2004).
[37] www.webster.com
[38] *U.S. v. Councilman*, 418 F.3d 67, 69-70 (1st Cir. 2005) (emphasis added).
[39] *Proetto*, 771 A.2d at 830; See also *American Civil Liberties Union v. Reno*, 929 F.Supp. 824, 830 (E.D.Pa. 1996) (comprehensive history of the Internet).
[40] *Proetto*, 771 A.2d at 829.
[41] *People v. Gariano*, 366 Ill.App.3d at 390-91, (Neville, J., dissenting).
[42] 720 ILCS 5/14-1(e) (West 2004).
[43] Available at http://www.aim.com/get_aim/win/latest_win.adp (last accessed Sept. 3, 2007).
[44] Available at http://www.google.com/talk/about.html#privacy (last accessed Sept. 3, 2007).
[45] *Id.*
[46] *Id.*
[47] 204 Ill.2d 332, 347 (Ill. 2003).
[48] *Id.* at 349
[49] *Id.*
[50] *Id.* at 349-50.
[51] *Id.*
[52] *Proetto*, 771 A.2d at 830.
[53] *Id.*
[54] *Id.*

Who's Who in the DCBA Committees

There's Something About Mazy: An Interview with Law Practice Management Committee Chair Mazyar Hedayat

by Ted A. Donner

Mazyar Hedayat likes the internet. I mean it. If you know him - at all - you understand what I'm saying. He likes the internet.

Hedayat launched his first website in 2000 and by 2001 he had set up a booth at the ABA Tech Show. Then he advertised his work in the ABA Tech Journal and came to realize that there was something about that kind of publication that didn't quite work for him. "The more I looked at it," he says to me one afternoon, "the more I realized that these things read like expanded press releases. Sometimes they aren't even that expanded. Sometimes they're just press releases. They're ads for things. They're conduits for selling more Westlaw subscriptions or new printers. And for some people, that's law practice management. It's new laptops, new software, and it's Web 2.0, which, alright, that's what interests me the most."

Hedayat chairs the DCBA's Law Practice Management Committee ("LPM"), a committee that doesn't hold regular meetings at the Bar Center, but does meet from time to time on line. LPM provides its members with one of the DCBA's only blogs (www.dcbalpm.wordpress.com) and its only wiki (http://dcbalpm.jot.com/?login=1&loginCode=LoginPlease).

Ted A. Donner, Editor of the DCBA Brief, *is the principal of Donner & Company Law Offices LLC (with offices in Wheaton and Chicago) and an adjunct professor with Loyola University Chicago School of Law. His practice is concentrated in the representation of small to medium-sized businesses in transactions and commercial litigation. He is the author of two treatises for Thomson-West: The Attorney's Practice Guide to Negotiations (with Hon. Brian J. Crowe) and Jury Selection: Strategy & Science (with Richard Gabriel).*

If you don't know what a blog or a wiki is, you're not alone.[1] One thing you should know, though, is that these are instruments which Hedayat takes pride in having first introduced to the DCBA and which he only wishes the membership would hurry up and come to understand. "This committee has given me an interesting ride," he says. "I'm in my third year as chair and it's been interesting all along. The stuff we were talking about three years ago has become the norm for large firms now and will be standard fare for small firms three years from now. In the meantime, though, it's often frustrating for me when people check these things out on line and say, 'What are you trying to do, because I don't get it.'"

"In 2005 there was no one basically on the Practice Manage-

ment Committee," says Hedayat. "Meetings were called and called off. The first meeting of LPM that I chaired there were maybe 7-8 people. I didn't know any of them. No familiar faces whatsoever. I figured, 'Okay. Already I'm not inspiring my colleagues.' It was kind of an auspicious beginning." Then, over time, as he experimented with blogs and other developing internet media ("I went kind of blog-nuts," says Hedayat) he began to develop a niche for himself, and a place to focus on developing LPM.

LPM doesn't meet monthly. It's not a substantive law committee, so there aren't a lot of seminars. But the things the Committee does - or can do - are limited only by the imaginations of its membership. "It's free form," Hedayat concludes. "It's the foremost place in this bar association, in my opinion, to be entrepreneurial. You can affect the practice and way beyond, simply by participating. My blog, for example is read around the world, from all over the United States to Europe to Japan... we have a premier platform. If you have something to contribute to the profession - if you want to be read by people around the world, or if you want to kick around some ideas, you should participate. We almost always have something novel to talk about."

Members interested in the DCBA's Law Practice Management Committee can contact Mazyar Hedayat, of course, by email (mhedayat@mha-law.com).■

[1] But try using either word as a search term on line and you're bound to get the idea soon enough.

Who's Who in the DCBA continued

An Interview with New and Young Lawyer Committee Chair, Dion Davi

by Melissa Piwowar

The New and Young Lawyers Committee might well be the most "social" crew in the DCBA, however membership can be an essential tool for any new practitioner. This committee's meetings aren't your typical DCBA luncheon. No call to order and no minutes. Chair **Dion Davi** and Vice Chair **Christa Schneider** steer the helm each month to a different location around DuPage County, usually to a local restaurant or watering hole on the second Tuesday of every month.

Davi took a few moments away from his Family Law practice to discuss the New and Young Lawyers Committee (sometimes also referred to as the Young Lawyers Committee). Davi initially points out that not all new lawyers are also necessarily young ones. Regardless of your age, the New and Young Lawyers Committee gives its members a place and outlet to network with more senior lawyers, other new and young practitioners as well as a few members of the Bench. Committee meetings mostly consist of social events generally beginning at 5:30 with a rotating venue as determined by Davi and Vice-Chair Schneider. Davi explained that these outings provide "a more casual and comfortable atmosphere giving new members of the bar an opportunity to gain insights into the practice of law, network for job opportunities, as well as just relax and have a good time with colleagues."

"Though the committee is aimed at new and young members of the DuPage County Bar, we welcome anyone who wants to connect with other members."

Melissa Piwowar *works as a paralegal with Donner & Company Law Offices LLC. She is a member of the DCBA Brief Publication Board and the author of a number of prior articles for the Brief, including "Riders Left Behind: Illinois Law for Children Riding on Motorcycles Fails to Keep Pace" (December 2005), and "Corporate Resolutions for the New Year" (December 2006). She is a member of the American Society of Trial Consultants, with which she is currently working as a member of the planning committee for the ASTC 2008 National Conference to be held in Chicago, Illinois.*

Davi says the Committee tries to plan a "Lunch with a Judge" approximately once every quarter.

These luncheons generally involve informal conversations regarding courtroom procedure and practical tips geared to the new litigator or the litigator who's new to DuPage County. Past guests include Associate Judges **Linda E. Davenport** and **Brian J. Diamond** who discussed the judicial appointment process and operation of field courts in DuPage. Chief Judge **Ann Jorgenson** was the guest of the inaugural "Lunch with a Judge." Jorgenson shared the practices she felt were essential to the practice of law, her appoint-

Continued on page 52

An Interview With Child Advocacy Committee Chair, Sean McCumber

by Susan O'Neill Alvarado

One of the DCBA's most active members, **Sean M. McCumber**, is this year's Chair of the Child Advocacy Committee.[1] In his role as Chair, McCumber has planned two major seminars: one on October 20, 2007 to train attorneys who seek appointments as Guardians *ad Litem* in adoption cases, and one in May, 2008 on the ethics of representing children. The Child Advocacy Committee is made up of members of the DCBA who work in various areas of the law that affect children, including juvenile public defenders, adoption attorneys, family law attorneys and attorneys who work in school law. Areas of concern include domestic relations, paternity, guardianships in probate, adoptions, school law, juvenile justice, abuse and neglect. The Vice Chair is **Henry Kass,** who is taking the lead on organizing lunch seminars for regular committee meetings. Meetings are held every other month on the third Tuesday of the month. The first meeting of the year is scheduled as a joint meeting with family law committee for October 23, 2007.

October 23 is a key date for both the Child Advocacy and Family Law Committees because, at that meeting, McCumber will present a proposed revision to Local Rule 15. At the request of the **Honorable Judge Rodney W. Equi**, McCumber has been working with roughly 20 other attorneys and judges to revise Rule 15 for a period of months. That work, in turn, inspired McCumber to also suggest that the Committee look at Local Rule 21, which he has now approached the **Honorable Bonnie M. Wheaton** to consider on behalf of the committee. McCumber, **Laura Kern** and **Debra Braselton** are working on a proposed revision to Rule 21 that will go to the Child Advocacy Committee for review before submission to the chancery judges.

So why all of this focus on rules? "I think part of the problem with all of us as practitioners," says McCumber, "both the Family Law and Child Advocacy practitioners is that we get so wrapped up in winning that we forget the rules of procedure and their importance. I don't mean to nit pick but it would help if we paid attention to the rules. By revising the adoption rules, for example, we can become a more predominant county in adoptions. We can take the lead and demonstrate that DuPage is at the cutting edge instead of being led by the law. It doesn't happen, but sometimes you hear people say they don't want to do an adoption in DuPage because they're behind the times. If we get things clear, about how things should get done, people will be more comfortable with the process and it will be easier for them."

Even the most cursory review of McCumber's schedule reveals his life's priority: children. On both a personal and a professional level, McCumber spends a great deal of time making sure that the most helpless members of our society are not forgotten. Ever since his early days McCumber has walked the walk when it comes to protecting children. He began working with children at age 18 as a camp counselor for the YMCA and continued in that role throughout his undergraduate days at Illinois State University. Although his original interest was teaching, he chose instead to pursue a degree in juvenile justice. Acting as a juvenile probation officer during the last several months of his undergraduate days, he quickly learned that he could more effectively impact young people if he was directly involved in the legal system as an advocate.

Susan O'Neill Alvarado *focuses her practice on family law issues in DuPage County with the firm Susan O'Neill Alvarado & Associates. She is a member of the DCBA Board of Directors as well as a number of individual committees. She also sits on the Board of Directors for IICLE and is an adjunct professor at DePaul University.*

McCumber earned his law degree at the University of Illinois College of Law where he continued his unwavering commitment to children by laying the foundation to create the Office of the Public Guardian in Champaign County. State funding for the proposed Guardian's office fell through and McCumber laughs as he reflects on

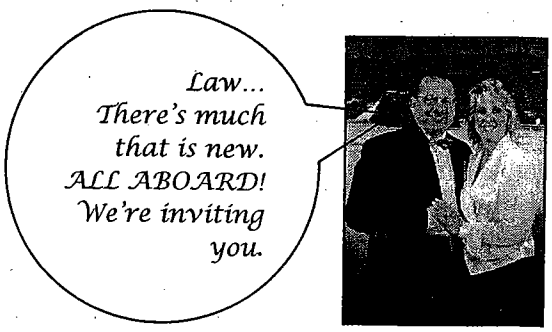

See http://www.dcba.org/cle.htm
http://www.nanaimo.cruiseshipcenters.com
http://www.princess.com/ships/cb/index.html

Don't Miss the Law Boat!!

The rates have just been reduced!

*Cabin rates**

Princess Cruise Lines' Caribbean Princess

Balcony Staterooms start at $847 (233-285 sq. ft)
Inside Staterooms start at $599 (160 Sq. ft.)
Obstructed Ocean view start at $747 (165 sq. ft.)
Mini-Suites start at $1,247 (323 sq. ft.)
(If you have already made reservations you will be credited accordingly)

*Prices are per person based on double occupancy and subject to availability at time of booking. Prices include cruise, part charges and taxes. Airfare available.

Deposit of $250 per person due to Nanaimo CruiseShipCenters, 1-888-423-7114 to book your cruise!

The CLE portion of the cruise (the part when you are not eating, drinking, sleeping or shopping) will include a presentation by Jack Donahue on the **"The Ten Vital Steps in Criminal Litigation"** which will include Mental Health Issues, Pre-trial Motions, Post-trial Motions, Cross Examination, Sentencing Problems, Closing Arguments and Ethics.

Also, Kent Gaertner will discuss **"Bankruptcy Issues in Non-Bankruptcy Cases."** This will include: Trustee Recovery of Property Transferred Pursuant to a Marital Settlement Agreement; Discharge of Debts Incurred Through Potential Criminal Acts; Collection of Personal Injury Claims from a Debtor in Bankruptcy; and Removal of Judgment Liens from Debtor's Property After Close of the Bankruptcy.

Plus a presentation from President Fred Spitzzeri: **"Conflict Resolution: Arbitration, Mediation or Litigation, Case Law Update."**

Glenn Gaffney will discuss the **"Human Rights Act."**

Some of our other esteemed guests include Frank & Sharon DeSalvo, Mr. & Mrs. George Lynch, Mr. & Mrs. Zachary Lawrence, Sharon Knobbe and hubby, and others.

☐ I would like to board the ***Law Boat***. Enclosed is my registration fee of $100, payable to the DCBA, for up to 6 MCLE hours.

Name__________________________________ ARDC No.______________________

Address________________________________ City/Zip______________________

Phone________________ Fax________________ Email______________________

Credit card #__________________________________ Exp date___________________

DuPage County Bar Association
126 S. County Farm Road, Wheaton, IL 60187

Don't forget to book your cruise via Nanaimo CruiseShipCenters, 1-888-423-7114!

how the next seven years of his life were spent at the large corporate law firm of Winston & Strawn, representing large tobacco companies, pharmaceutical giants, and other consumer products companies. Still, even during that period of his life, he maintained an active *pro bono* schedule with several Cook County agencies representing indigent clients in divorce and adoption cases. His commitment to providing legal services to the less fortunate continues today in his work as Vice-Chair of the DuPage County Legal Aid Committee.

In short, McCumber believes that lawyers have a special responsibility to protect children who find themselves in the "system" while their parents battle for property rights. As he often points out, adults sometimes overlook the true impact on the children of divorce and custody disputes. "The legal system must provide a safety net for children," he points out. "To do otherwise simply guarantees their return to the system as adults."■

[1] McCumber also serves as the Chair of the Rules Revision Subcommittee created to revise the local circuit court rules for Domestic Relations cases. In addition, he serves as Vice Chair of the Media Committee, the Legal Aid Committee, the Entertainment Committee and the Judges' Nite Committee. That's not all – He is also an active member of the *Brief*'s Editorial Board, the Family Law Committee, the Committee for Continuing Legal Education, and the Child Law Section Council of the Illinois State Bar Association. Sean, have you ever considered getting a hobby?

INTERVIEW/DAVI
Continued from page 49

ment as Associate Judge, her ascension to Chief Judge, and beyond.

When asked whether meetings were open to other bar members Davi responded "of course everyone is welcome! Though the committee is aimed and new and young members of the DuPage County Bar, we welcome anyone who wants to connect with other members."

Dion Davi got his undergraduate degree in psychology at DePaul and received his J.D. from John Marshall Law School, he spent a few years as an Assistant State's Attorney in the Child Support Enforcement Division in DuPage, then did a stint as a sole practitioner before landing at Mirabella, Kincaid, Frederick & Mirabella, P.C. ■

OFFICIALLY SPEAKING

Meet DuPage County Coroner: Peter Siekmann

by Christa A. Schneider

It was in a large, sun-lit, second floor office that I was greeted by DuPage County Coroner **Peter A. Siekmann**. Located in what used to be the old Public Defender's office, the Coroner's office sits in the heart of the DuPage County government complex almost directly across County Farm Road from the Courthouse.

The Coroner's office is a fully equipped and self-sufficient facility, with a morgue on the first floor and offices and records on the second. When they moved into this location in 1993, it was the first time there was a morgue in DuPage County. Up until then, autopsies were performed and specimens collected at the hospitals and funeral homes themselves by each facility's own forensic pathologist. It was under the guidance of former Chief Corner, **Rich Ballinger** that the building was transformed to the facility that it is today. Ballinger went to several coroner facilities throughout the Country gathering ideas for the building. The end result is the building as it is today.

The Coroner's office today has its own contracted Certified Forensic Pathologist that performs all of the autopsies on site. That being said, autopsies are not performed in all instances, but rather only when it is necessary to determine the manner and cause of death, which is the primary charge of the Coroner's office. There are five different manners in which a death will fall: (1) natural, (2) accidental, (3) suicide, (4) homicide, and (5) indeterminable. Cause of death can be any number of things, such as heart attack, cancer, knife wound, etc. Of 4,000 deaths last year within DuPage County, 300 required autopsies. Most of the time the Deputy Coroner called to the scene is able to determine the manner and cause of death independent of an autopsy.

While the Coroner and his deputies are in fact peace officers, they are not an extension of the Sherriff's Department. Rather, they are separate offices that work hand in hand. While the Coroner determines manner and cause of death, the Sheriff determines if

Christa Schneider *is an associate with Mirabella, Kincaid, Fredrick, & Mirabella, P.C. Formerly with the Public Defender's Office, Christa graduated from Valparaiso University School of Law in 2005, and North Central College in 2001. She is the vice chair of the DCBA Young Lawyer committee.*

DCBA Lawyer Referral Service Monthly Statistics

LRS Stats from 8/1/2007 to 8/31/2007:
The Lawyer Referral & Mediation Service received a total of 643 referrals (447 by telephone & 196 by Internet) from 1,056 contacts (843 by telephone & 213 by Internet) for the month of August.

Administrative	4	Family	160
Appeals	2	Federal Court	1
Bankruptcy	41	Government Benefits	2
Business Law	17	Immigration	6
Civil Rights	6	Insurance	8
Collection	49	Intellectual Property	4
Consumer Protection	17	Mediation	2
Contract Law	0	Military Law	0
Criminal	105	Personal Injury	33
Elder Law	2	Real Estate	80
Employment Law	65	School Law	5
Entertainment Law	1	Social Security	2
Environmental Law	0	Tax Law	1
Estate Law	27	Worker's Comp	3

Questions and inquiries: Attorneys please call (630) 653-7779
Clients please call (630) 653-9109

somebody is to blame and whether to pursue criminal charges. In these instances, the Coroner relies on the expertise of the Sheriff's Department to properly gather evidence, as there is a strong likelihood that these cases will end up in court.

Pete Siekmann started working at the Coroner's office thirty-one years ago as a favor for his friend, and then Chief Coroner, Robert "Tiny" Matthews. This was to be a temporary position, as Pete had just graduated from DeVry Institute of Technology with a degree in electrical engineering and had been hired to start working at a two wave radio company in Aurora.

Needless to say, what started out as temporary eventually turned permanent, and Pete found himself employed as a Deputy Coroner for the next seventeen years. He became intrigued with this line of work, with most of his time spent on the streets as an investigator. He remarks that, "Trying to help families at their worst time can be gratifying. You are not always successful, but you have to stay honest and truthful throughout."

In 1993, he became the Chief Deputy Coroner, which involved taking charge of the investigative portion of the office, where his primary responsibility was to conduct Coroner's Inquest Proceedings. From 1993 to 2002 he conducted roughly 1500 of these proceedings, which are essentially mini jury trials to determine the manner and cause of death.

He stayed on as that title until 2004 when he was approached by then retiring Coroner Rich Ballinger and encouraged to run for office. Although Pete had worked in this office most of his career, he had reservations when it came to delving into the political side of things. At the time, it seemed like a very foreign role. He did ultimately run and win under the republican ballot that year.

Pete still maintains a somewhat non-political attitude. When speaking of the seven full time Deputy Coroners in the office, he commented, "We all work together here. Even though I have the title of chief, I never really put myself above them."

Many changes have occurred in the Coroner's office in the last thirty-one years. New location. Larger staff. Population growth. The one constant is Pete Siekmann and his down to earth approach to a very serious job.■

BRIEF HISTORY

Continued from page 60

"*After Hours*" by **John M. Mulherin** and **Steven B. Levy** discussed activities, programs and establishments the reader might find enriching

November 1990

"*Controlling a corporation with less than 51% ownership*" by **Dean J. Leffelman**

"*Transferee liability-the long arm of the Tax Collector*" is explained by **John M. Mulherin**

Nancy E. Joerg asks "*Independent contractor status: An endangered species*?"

"*After Hours*" by **John M. Mulherin** and **Steven B. Levy** discussed activities, programs and establishments the reader might find enriching ■

LEGAL AID UPDATE

by Brenda Carroll

Clients Notify Us of Their Appreciation for Their Pro Bono Attorneys

Michael LoCicero is a general practitioner who has a practice in family and criminal law. Mr. LoCicero, who practices in Oak Brook, has taken many legal aid cases over the years. He was admitted to practice law in 1982.

He was recently assigned a pro bono case and his client sent me a copy of the letter he mailed to Michael at the close of the case. It is reproduced here.

> Dear Michael:
> I want to thank you for everything that you did for me regarding my divorce. I appreciate the effort you took to take care of my interests. You were very patient and understanding with me and took the time to explain everything so that I could understand it. And I also appreciated that you took the time to understand my problems so that you could help me with them. You were a very good attorney for me.
> May your business continue to do well. I will always remember what you have done for me and will recommend you to anyone that asks me.

What a wonderful attorney Michael must be for his client to take the time to let us know how he felt about Michael.

Eva Tameling takes on many legal aid cases and her client also took the time to express her gratitude to Eva in writing. Her client took further time out to tell our program how she felt about Eva and to give a donation in Eva's name to the DuPage Bar Legal Aid Service.

She writes to **Eva**:

> ....Thanks you so much for all of your help with my case! I really can't thank you enough – you did an amazing job! I am making a small donation in your name to the DuPage Bar Association to show my appreciation, and so they may continue to help others in my situation. I will be writing a letter to you about how happy I am with your services, and if you would like to use me as a reference, I would be delighted. You really did perform above and beyond the call of duty. Thank you so very much.
> The best of luck to you and your staff.

To the DuPage Bar Legal Aid Service, this client added the following:

> Ms. Tameling was absolutely amazing! She is an extremely wise and excellent attorney. I am very thankful to her, her staff and DuPage Legal Aid. Please accept this donation in honor of Ms. Tameling.

Eva has a practice in family law in Oak Brook, **Tameling & Associates, P.C**. She recently stated, "It is so important that the pro bono clients we have feel they get the same service all our other clients receive." Obviously **Michael LoCicero** feels the same way.

__Ms. Carroll__ has been the DuPage Legal Assistance Director since 1988 and on the DCBA Board of Directors since 2004. She earned her J.D. at IIT-Chicago Kent College of Law in 1986. Admitted in Illinois and Northern District, 1986, U.S. Supreme Court, 2005. Officer/Secretary of Child Friendly Courts Foundation; Past President, Board Member of DuPage Association of Women Lawyers.

Pro Bono Cases for August, 2007

The following are attorneys who have accepted and closed their pro bono cases for the months of July and August, 2007.

Brian A. Grady
Danya A. Grunyk
Michael Powers
Mark W. Tader
Robert Wier
Jesse V. Barrientes
Mary Jane Chapman
Michael Duhig
Henry Kass
Deborah Klass
Richard D. Klein
John Martoccio
Sean McCumber
Thomas M. Newman
Christine Ory
Elizabeth Simons
Eva Tameling
Paul Watkiss

DuPage County Bar Association

CONTINUING LEGAL EDUCATION
FINANCIAL HARDSHIP POLICY

The DCBA Executive Director may, at his/her discretion, reduce or waive the registration fee for any DuPage County Bar Association member who desires to attend an Association seminar, but for whom the cost would be a financial hardship. Requests shall be made via the Application for CLE Grant, and submitted with the seminar registration form **at least 14 days prior to the seminar.** Financial aid shall be capped at $250 per attorney per bar year (July 1-June 30).

The determination of whether a lawyer is eligible for a reduced or waived fee will be made on a case by case basis based upon professional relevance, financial need and the space available for the seminar. All requests will be kept confidential.*

Approved registration fee waivers will include the cost of refreshments, if provided to registrants.

If a lawyer is found to be eligible for a reduced fee, s/he shall be responsible for paying the balance of the registration fee prior to admission into the seminar.

This policy shall be publicized in the *DCBA Brief.* A link shall be provided from the DCBA's CLE Home Page to the Application for CLE Grant.

*Except for disclosure to bar staff involved in processing the application and the decision to grant or deny the request.

DuPage County Bar Association
126 S. County Farm Rd., Wheaton, IL 60187

Application for CLE Grant

Name _____ARDC #_____ Date _____

Mailing Address _____ City _____ Zip_____

Phone Number _____ E-mail _____

Title of DCBA Seminar _____

Program Date _____Registration Fee _____ Amount Requested _____

By signing the application, the attorney applying for the grant to subsidize CLE registration fees for the identified CLE program attests:

1. I, _____, certify that my personal income for the current calendar year will be less than $35,000.
2. I have not received previous CLE grants in excess of $250.00 in this bar year (July 1-June 30).

_____
Signature of Applicant

Registration/Purchase Order – 2007

_____
Name (Please list all individuals attending events.)

_____
Firm

_____
Mailing Address

_____
City/State/Zip

_____
Phone

_____
Fax

Note: We cannot guarantee seminar materials or lunches will be available at the seminar for "walk-ins". Registered attendees will be given preference.

CLE seminars require *individual registration forms* and ARDC numbers.

Seminars and Social Events

Note: Early Bird fee (in bold) may be taken for paid registrations RECEIVED by the Bar Office *AT LEAST ONE WEEK PRIOR* to seminar/social event as shown. "Walk-ins" and those registrations received within 5 business days of the event, pay the regular registration rate. Associate Members and Law Students pay the "New Lawyer (0-3 Years since admission)" rate unless otherwise noted. Some events will have a "no refund" or "partial refund" policy, if noted.

Committee Meetings with MCLE Credit:
(You must pre-register to ensure lunch & credit)
Watch for notices of MCLE Meetings & More Details
Oct. 18 – Real Estate Law Committee

Social and Seminar Events

Oct. 13 Civil Law Seminar – ED
Cress Creek Country Club, Naperville
___ **@ $75**/$85**, DCBA Members** $ _____
___ **@ $110**/$120**, Non-Members** $ _____
___ **@ $60**/$70**, New Lawyers (0-3 Years)** $ _____

Nov. 30, Dec. 1,7 BASIC SKILLS COURSE - GN
Required Course for 2007 Admittees, Open to All.
Up to 15 hours of MCLE. *NOTE DATE CHANGES*
___ **@ $75 – 2007 Admittees-All 3 Sessions** $ _____
___ **@ $25, Nov 30 - New Lawyers (1-3 Years)** $ _____
___ **@ $25, Dec. 1 - New Lawyers (1-3 Years)** $ _____
___ **@ $25, Dec. 7 - New Lawyers (1-3 Years)** $ _____
___ **@ $75, All 3 Sessions-New Lawyers** $ _____
___ **@ $75, Nov 30 - All Others** $ _____
___ **@ $75, Dec. 1 - All Others** $ _____
___ **@ $75, Dec. 7 - All Others** $ _____
___ **@ $225, All 3 Sessions – All Others** $ _____

Nov. 14 – Veteran's Day Luncheon
Attorney Resource Center, RSVP Required
____ **x Complimentary – DCBA member veterans**
____ **x $10, All Other Registrants** $ _____

Dec. 6 Holiday Party, 4 – 7 pm
Arrowhead Country Club, Wheaton
___ **$35, All Registrants** $ _____

Goods and Services

PRE-ORDER YOUR 2008 ATTORNEY DIARY – expected delivery, mid-October. (Payment must accompany orders. Quantities are limited.)
____ **x $23 for Bar Office Pick-Up** $ _____
____ **x $28 to be mailed** $ _____

COURT RULES AMENDED THROUGH 1/7/07
____ **x $20, Bound (add $5 each for mailing)** $ _____
____ **x $20, on disk (add $5 each for mailing)** $ _____
____ **x $15, Unbound (add $5 each p+h)** $ _____
____ **x $20, by email attachment*** $ _____
____ **x $2, Amendments only (add $2 p+h)** $_____

MULTI-BOARD RESIDENTIAL R. E. CONTRACT 4.0
Sold in multiples of 2 – hardcopy only, includes Postage
___ **x $2 for each set of 2, Mailed** $ _____
(No need to pre-order for Bar Office pick-up- 2/$1.00)

TOTAL Enclosed/Charged $ _____

Check # _____ ARDC # _____ (required for MCLE Credit)

++Credit Card #_____Exp: _____

Signature for Charge: _____

Mail or fax registration form with payment to DCBA, 126 S. County Farm Rd., Wheaton, IL 60187. Fax number: (630) 653-7870. Most items may also be purchased through the DCBA Store at www.dcba.org. Store may be used for credit card payment only – RSVP's and complimentary registrations should be mailed, emailed or faxed directly to the Bar Office.

PHOTO GALLERY

Legal Aid Committee Chair Richard Rius at the Kane County Cougar's Outing to benefit the DuPage Bar Legal Aid program. Photo by Jim Reichardt.

Legal Aid Director Brenda Carroll with Maggie Bennett, Angela Imbierowicz and Mike Scalzo. Photo by Jim Reichardt.

Judge Linda Davenport, Joe Fortunato, Kim Kaye, Sue Makovec, Mary Downard and Judge John Demling. Photo by Jim Reichardt.

Steve Marderosian, Greg Adamo and Deven Kane at the Young Lawyer's Happy Hour, Thursday, August 16, 2007.

Chantelle Jackson, Joseph Emmerth, Dion Davi and Christa Schneider also enjoying the Young Lawyer's Happy Hour.

CLASSIFIEDS

Opportunities

LAW PRACTICE FOR SALE

Established 3 years. Repeat clients, referrals and walk-in business. Over 450 files opened since 1/1/07. Tax, Estate Planning and Real Estate. **Call John 630-250-0000**

COPIER FOR SALE

For Sale; used Xerox Copier Model 5328, analog, good condition, 15 yrs old with low copy count. $200 **Call 630-879-2229 or email beth@hogan anddean.com**

Space Available

DOWNERS GROVE

Civil War era office building for rent. Renovated but retains its historic character. 1500 Square Feet; 5 offices, central secretarial space and reception area. Large paved parking lot. 1001 Maple Ave. **Call (630) 810-1250 or 852-4060.**

WHEATON

Walsh Knippen Knight & Pollock historic office building for lease or purchase. 601 West Liberty Drive (WKKP is relocating to a larger office). Private office building, 3,279 sq. feet, 2 floors, 6 executive offices, large reception area, large conference room, supply/media room, kitchen, library, large secretarial and administrative areas. Private parking lot; room for future building addition. Walk to train and downtown Wheaton, minutes to courthouse. **Contact Jane @ (630) 462-1980 or email jane@ wkkplaw.com.**

OAK BROOK

Oak brook executive office space for lease in attorney/professional suite; conference rooms; extensive library. **If Interested, call Bev at 630-574-0525.**

DARIEN

Solo? Going off on your own? We have space for an attorney plus one associate/ assistant in our newer Darien office just off I-55. Access to two conference rooms, kitchenette, high-speed internet, receptionist all available. You'd be sharing space with a small transactional firm (real estate, estate planning, business law). We also share the building with a small accounting firm. Referral work available (depending on practice areas). **Contact Bill at w.cotter@cotter andassociates.com or 630-724-9950 for more information.**

WEST CHICAGO

Attractive, 12'x16' front office for rent in downtown historic district. Rent includes all utilities except telephone. Wireless internet. Spanish-speaking receptionist and translator available at additional cost. **Call Dayna at 630-639-5203.**

WHEATON

One office in prestigious Danada area; minutes from courthouse; secretarial space available; conference room, kitchen, reception area; available immediately. **Call (630) 260-9647.**

NAPERVILLE

Office space available at Northwest corner of Diehl and Mill Streets. One furnished office, approximately 125 square feet, includes access to shared Conference Room and Kitchen with other attorneys. Separately available is access to shared conference room without office space. **Contact Peter at (630) 983-4144.**

WHEATON

Need More Space? 1st Floor Unit With Over 1000 Sq. Ft. Plus A Huge Basement For Storage. 3 Large Offices, Conference Room, Reception Area Plus Space For Administrative Assistant. Convenient To Downtown Wheaton and County Buildings. For Rent Only. ** FIRST MONTH FREE! TENANT MAY CHOOSE NEW CARPET! ** **Call Ron @ 630-670-6710**

ITASCA OFFICE SPACE AVAILABLE

Three 13'x 12' offices and three 13'x 10' offices available in law office in the Chancellory Business Park in Itasca. This is a beautiful new buildout available as of July 1, 2007. Rent includes shared reception, use of two large conference rooms and kitchen, all utilities, DSL, and possible reception assistance. **Inquire amencini@ mencinilaw.com or call 630-616-3900.**

WHEATON

Park East Office Suites

- Individual Private Offices
- Conference Rooms
- Personalized Phone Answering
- T1 Internet Connection
- Voice Mail & Patching
- Complete Business Services
- Corporate Identity Program
- Ample Parking
- Includes all Utilities
- Convenient to Tollway & Restaurants

Call Donna at (630) 653-9909
www.parkeastoffices.com
1755 So. Naperville Rd., Suite 100, Wheaton, IL 60187

AURORA/NAPERVILLE

Share elegant furnished office & receive consistent referrals. Our established financial planning/tax preparation firm's goal is to rent out part of our office space to an Attorney who specializes in Wills & Trusts. The right Attorney will receive consistent referrals. Great location & image. New one story brick building / corner window offices/ conference/ 2 station reception/ secretary space, Phone service, T-1, copier/fax/scanner. Immediate occu-pancy. Over 100 ready referrals. Negotiable space and price. **Call Marge at 630-723-0900 or email margez@associatedtax.us for details.**

Employment

LITIGATION ATTORNEY

Medium size Chicago law firm is seeking a full-time associate attorney with 1 to 3 years litigation experience. Assistant State's Attorney's welcome to apply. Excellent insurance and 401K benefits. Please email letter and resume to bar@dcba.org and reference Box P.

ASSOCIATE ATTORNEY POSITION AVAILABLE

Expanding management side labor and employment law firm in the western suburbs seeks attorney with 1 to 3 years experience for practice in all areas of labor and employment law. Compensation commensurate with experience. Please e-mail your resume to Renée L. Koehler at Koehler & Passarelli, LLC, rkoehler@k-pllc.com. An EEO Employer.

LEGAL ASSISTANT

Naperville business law firm seeks Legal Assistant with strong telephone, writing, filing, word processing & internet skills for F/T (40 hrs) or P/T (25 hrs) position. One year min. law office exp. required. Pleasant environment. Salary comm. w/exp. Fax resume with cover letter incl. F/T or P/T preference & salary requirements to 630-548-5568 or e-mail to russwinlaw@sbcglobal.net.

LEGAL SECRETARY – PART TIME POSITION

Established Wheaton law firm seeking permanent, experienced family law legal secretary. Monday-Friday 9 to 3. Accuracy, organization and proficiency in WordPerfect and Word a must. Please fax or e-mail resumes with salary requirements to 630-682-0561 or cklancir@aol.com.

PARALEGAL

A Bensenville Law Firm has an **immediate opening** for a full time Legal Secretary. Strong computer and dictaphone skills are required. Our firm is friendly and professional. Fax resume to attention Pamela Bouwman at 630/595-4598 or e mail to pbouwman0524@ hotmail.com

ASSOCIATE ATTORNEY

Law firm located in Oak Brook is seeking a full-time **Associate Attorney** with at least one year of experience in a law firm or accounting firm environment. C.P.A. license or accounting degree preferred. The firm's primary practice areas include sophisticated estate planning for high net worth individuals and family groups, estate and trust administration and preparation of estate and gift tax returns. Our firm prides itself in maintaining a professional and friendly atmosphere while helping our clients and their families achieve their personal, family and business goals. Compensation commensurate with experience and qualifications. Benefits include health insurance and retirement plan. Target start date is October of 2007. **Please e-mail a cover letter with your resume and your salary requirements to oakbrooklaw@comcast.net**

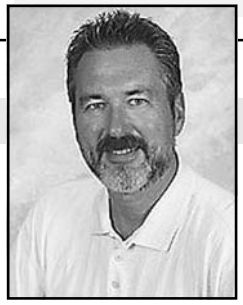

A BRIEF HISTORY

DeJa View: Highlights from the History of the DCBA Brief

by Thomas A. McClow

April 1990

Future DCBA President **Ross P. Toran** highlighted "*Objection Tips from an Ol' Pro*"

"*Invocation of Right of Counsel in Court Bars further interrogation on any offense, so long as Defendant is in continuous custody*" by **Stephen W. Baker** of the DuPage Public Defender's Office might win an award for the longest article title

"*Automation issues for the small and medium-sized law firm*" by **Jay Stephens**, MBA, JD demonstrated his power of premonition by stating "automation of law firms is a 'when' proposition, not an 'if.'

Fran Anderson asked "*Are you a Best Boss*?"

Continuing the technology theme, **Nick P. Poulos** using the 80386 processor as the benchmark discusses "*The Multi User personal computer in the small office environment*."

"*The practice of law today or does this sound familiar*?' by **Donna Renn** laments that office automation has devalued our profession.

Discussing IRMO Eckert, 116 Ill. Dec. 220, **Joseph P. Glimco III**, discusses "*Leave to remove: Is the 2nd District loosening the reigns [sic] on children leaving Illinois*."

"After Hours" by **John M. Mulherin** and **Steven B. Levy** discussed activities, programs and establishments the reader might find enriching

May-June 1990

William I. Ferguson begins his article "*An Attorney's survival guide*" by observing "A paying client is a wonderful thing."

"*Employers' Contribution Liability and the Workers' Compensation Act: Promoting a harmonious balance*" was authored by **Joseph F. Spitzzeri** and **Alfred A. Spitzzeri**

"*Sale of property encumbered by Federal Tax Liens*" by **Tony Mankus**

Wayne Brucar presents "*From a whisper to a scream: A primer on Articulable Suspicion in the 2nd District*"

"*After Hours*" by **John M. Mulherin** and **Steven B. Levy** discussed activities, programs and establishments the reader might find enriching

July-August 1990

"*Rewriting the Right to Refile: the Plaintiff's three 'R's*" explained by **Judge William E. Black**

Sarah L. Poeppel presented "*Basic Bankrupcy: A Primer*"

With photographs by **Mark A. Ialongo**, **Candace Purdom** honored the old courthouse in "*Courthouse Tales: Reflections of 201 Reber Street*"

"*Basic Business Formation*" by **Steven B. Levy**

Kathleen Zellner began a monthly column entitled "*Case Law Update*"

"*After Hours*" presented by guest writers **Judge Edmund Bart** and **Maddy Liss-Bart**

September 1990

William C. Atten was honored in a feature article by **Candace Purdom** called "*Veteran lawyer and Judge: William C. Atten*"

"*Recovery of Economic Loss for Professional Negligence*" by **Frank DeSalvo**

"*Modifying custody based on cohabitation; Jarret revisited*"

"*After Hours*" by **John M. Mulherin** and **Steven B. Levy** discussed activities, programs and establishments the reader might find enriching

October 1990

"*Alternative Dispute Resolution methods and their applications*" by **Judge Robert E. Byrne** and **John J. Lapinski**

Judge William E. Black described "*The Pleading Dilemma*"

"*A guide to reviewing Plats of Subdivision*" was presented by **Richard F. Bales** of Chicago Title

"*Case Law Update*" by **Kathleen Zellner**

Continued on page 54

Thomas McClow *is the principal of the Law Office of Thomas A. McClow, Ltd. in Winfield, and an adjunct professor with Judson University in Elgin. He received his B.S. from Michigan State University and his J.D. from Loyola University Chicago School of Law. Mr. McClow is known to many as the "Traveling Lawyer" for his years of travel to domestic and international destinations. Phone: (630) 221-9057 and e-mail: tom@mcclowlaw.com*

DCBA Holiday Party

Thursday
December 6, 2007

4:00 - 7:00 pm

Arrowhead Country Club
26W151 Butterfield Road
Wheaton, Illinois 60187

Registration fee: $35.00

Hors d'oeuvres
Cash Bar

Bring a new **unwrapped** toy for Lawyers Lend a Hand Toy Drive

---

Holiday Party Registration

Name:_____ Phone:_____

Address:_____

No. of Tickets @ $35.00 each _____ Check #:_____

Credit Card #_____ Exp. Date:_____

Signature for charge:_____

Winfield Community Bank

A Lawyer's Trust Fund "Honor Roll" Bank

IOLTA

High Interest. No Fees. Easy to Open.

WINFIELD COMMUNITY BANK

Complete Banking...

...From Your Office

Access your customized business checking account at your convenience with our **Free Online Banking.**

Make your deposits without leaving your office with our **Remote Deposit Capture!**

...From Your Home

Competitive Checking, Money Market and Savings accounts designed to fit your needs.

Unlimited account access with our **Free Online Banking**.

Simplify your monthly bills with our **Free Bill Pay**.

Open your accounts today!

WINFIELD COMMUNITY BANK

27W111 Geneva Road
Winfield, Illinois 60190

Phone: 630-871-9711
Fax: 630-871-9690